DN 752 GPP-01

- Programmable pressure sensors 0...16 bar with digital display
- For smart pressure control in processes
- Pressure sensor for pressures from 0...16 bar relative
- With up to two switching outputs and analogue output
- Programmable functions, such as damping of pressure peaks
- Rapid adjustment of two switching outputs, limit values, hysteresis



TYPE	DN 752 GPP-01
Product ID	P72014
Pressure (relative)	0 bar ... 1 bar
Process connection	G3/4
Output	switching output
Supply voltage	24 V DC +/- 20 %
Current consumption max.	50 mA
Switching current max.	200 mA
Ambient temperature	-20 °C ... 70 °C
Medium temperature	-20 °C ... 80 °C
Compressive strength (at 25°C)	5 bar
Material sensor touched by medium	stainless steel AISI 316 Ti
Material gauge head	ceramic
Material housing	PBT
Seal material	FPM
Protection [EN 60529] housing	IP 65
Electrical connection	M12 connector
Accessories	Anschlusskabel SLG 4-2 (Z00445)

EGE-ELEKTRONIK SPEZIAL-SENSOREN GMBH

TEL. +49 4346 41580 . ege-elektronik.com

Technical Image

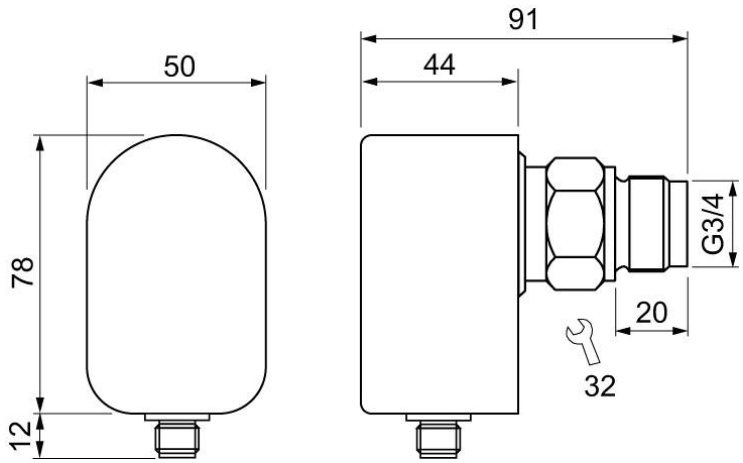

Pin Map

