Capacitive sensors for aggressive, corrosive media | KNK 025 GSP

- Capacitive proximity switches for the detection of non-metallic and metallic objects
- Smooth plastic sleeve
- Diameter 20 mm, 34 mm
- Ffor counting, position queries of parts or products, for example in furnace technology, chemical industry or plastics processing

Ø34 mm - sn 20 mm non flush - Output PNP-NO



TYPE	KNK 025 GSP
Product ID	P40096
Operating Distance sn	20 mm non-flush
Adjustment range	1 mm ... 30 mm
Output	switching output
Output function	PNP-NO
Supply voltage	10 V DC ... 55 V DC
Current consumption max.	4 mA
Switching current max.	400 mA
Short circuit proof	yes
Overcurrent release	800 mA
Reverse polarity protection	✓
Voltage drop max.	1.5 V
Residual current	2 mA
Switching frequency	25 Hz
Ambient temperature	-25 °C ... 70 °C
EMC-class	A
Material housing	PBT
Display	✓
Protection [EN 60529]	IP 67
Electrical connection	2 m PVC-cable 3x0.5 mm²

EGE-ELEKTRONIK SPEZIAL-SENSOREN GMBH

TEL. +49 4346 41580 . ege-elektronik.com

Accessories (in scope of delivery)

mounting clamp Ø 34 mm (Z00102)

Technical Image

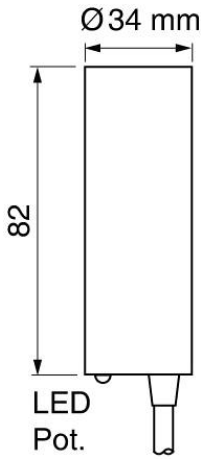

Pin Map

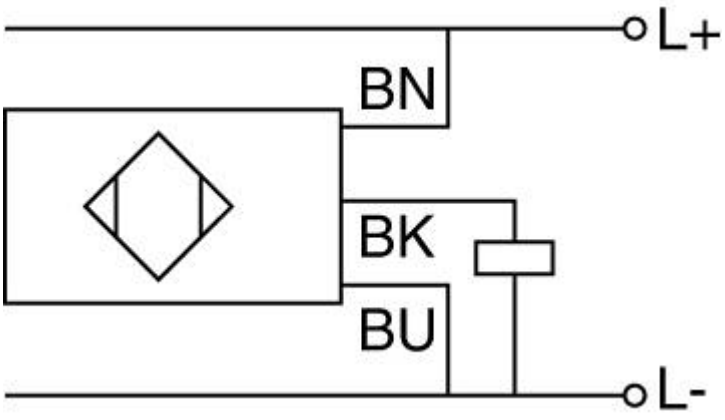

EGE-ELEKTRONIK SPEZIAL-SENSOREN GMBH
TEL. +49 4346 41580 . ege-elektronik.com