Analysis devices for inductive sensors | IU 130 WP

- Amplifier for inductive sensors
- Intuitive operation by means of potentiometer and LED display
- With switching output
- **230 V AC - PNP NO-NC**



TYPE	IU 130 WP
Product ID	P30438
Output	switching output
Supply voltage	230 V AC +/- 10%
Current consumption max.	15 mA
Switching current max.	400 mA
Switching frequency	5 Hz
Ambient temperature	-20 °C ... 70 °C
EMC-class	A
Material housing	PBT
Display	LED yellow
Stand-by Indicator	LED grün
Protection [EN 60529]	IP 67
Electrical connection	2 m PVC-cable 4x0.75 mm² (number 1-4)

EGE-ELEKTRONIK SPEZIAL-SENSOREN GMBH

TEL. +49 4346 41580 . ege-elektronik.com

Technical Image

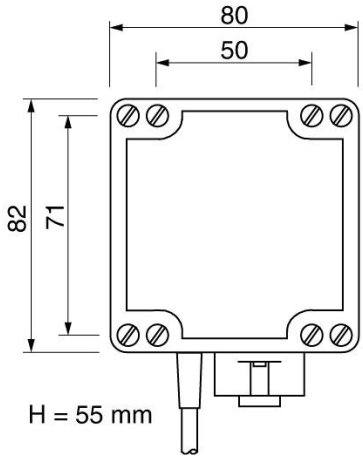

Pin Map

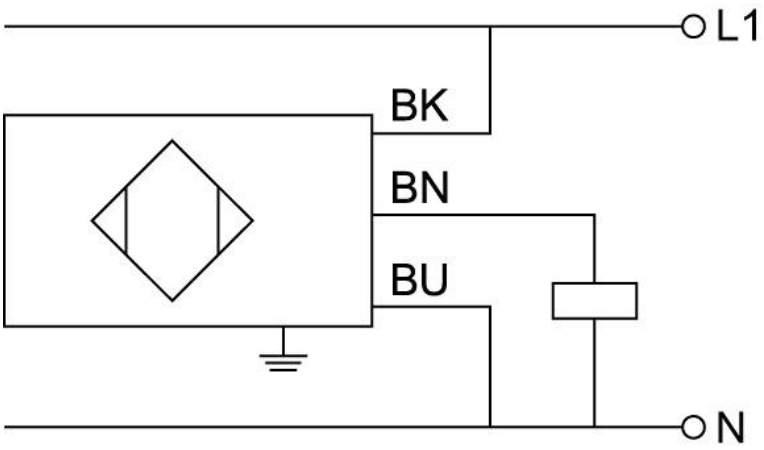

EGE-ELEKTRONIK SPEZIAL-SENSOREN GMBH
TEL. +49 4346 41580 . ege-elektronik.com