Sensors for zone 2/22 with integrated electronics | IGVEX22c 02 GSP

- Ex area of use: Zone 2 and Zone 22
- One piece stainless steel housing
- IECEx-certification / ATEX-certificate of conformity
- External amplifier not required as no intrinsically safe supply necessary
- Explosion protection realized by type of protection "increased safety" and "protection by enclosure"
- Installation and commissioning in accordance with EN 60079-14



M12x1 - sn 2 mm flush - Output PNP-NO

TYPE	IGVEX22c 02 GSP
Product ID	P31397
Thread/sleeve	M12x1
Operating Distance sn	2 mm
Output	switching output
Output function	PNP-NO
Supply voltage	24 V DC +/- 10%
Switching current max.	100 mA
Rated voltage max.	30 V DC
Switching frequency	180 Hz
Ex area uf use	Zone 2, Zone 22
IECEx Certificate	IECEx EPS 17.0042X
UKEX Certificate	EPS 22 UKEX 1 270 X
Certificate of conformity	EPS 17 ATEX 1 085 X
ATEX marking gas	Ex II 3G Ex ec IIC T6...T3 Gc
ATEX Marking dust	Ex II 3D Ex tc IIIC T80°C Dc
IECEx marking gas	Ex ec IIC T6...T3 Gc
IECEx marking dust	Ex tc IIIC T80°C Dc
Ambient temperature and medium temperature T6 in zone 2	-20 °C ... 60 °C

EGE-ELEKTRONIK SPEZIAL-SENSOREN GMBH

TEL. +49 4346 41580 . ege-elektronik.com

Ambient temperature and medium temperature T5 in zone 2	-20 °C ... 60 °C
Ambient temperature and medium temperature T4 in zone 2	-20 °C ... 60 °C
Ambient temperature and medium temperature T3 in zone 2	-20 °C ... 60 °C
Ambient temperature and medium temperature dust zone 22	-20 °C ... 60 °C
Material housing	stainless steel AISI 316 L, PSU
Display	LED red
Protection [EN 60529]	IP 67
Electrical connection	2 m PUR-cable 3x0,34 mm²

Technical Image

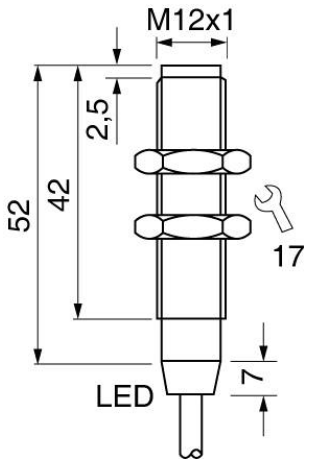

Pin Map

