# Intrinsically safe sensors for zone 0/20 | IGEXa 15

- Intrinsically safe sensors for zone 0/20
- With ATEX- and IECEx-certification
- Amplifier IKMb... is required for operation
- Connection: 2 m PVC-cable

**M30x1.5 - sn 15 mm non flush**



| | |
|---|---|
| **TYPE** | IGEXa 15 |
| **Product ID** | P31450 |
| **Thread/sleeve** | M30x1,5 |
| **Operating Distance sn** | 15 mm non-flush |
| **Ex area uf use** | Zone 0, Zone 1, Zone 20, Zone 21 |
| **ATEX Certificate** | EPS 17 ATEX 1 173 X |
| **IECEx Certificate** | IECEx EPS 17.0087X |
| **UKEX Certificate** | EPS 22 UKEX 1 139 X |
| **ATEX marking gas** | Ex II 1G Ex ia IIC T6...T3 Ga |
| **ATEX Marking dust** | Ex II 1D Ex ia IIIC $T_{200}$80 °C Da |
| **IECEx marking gas** | Ex ia IIC T6...T3 Ga |
| **IECEx marking dust** | Ex ia IIIC $T_{200}$80 °C Da |
| **Ambient temperature gas zone 0 T6** | -25 °C ... 75 °C |
| **Ambient temperature gas zone 0 T5** | -25 °C ... 75 °C |
| **Ambient temperature gas zone 0 T4** | -25 °C ... 75 °C |
| **Ambient temperature gas zone 0 T3** | -25 °C ... 75 °C |
| **Ambient temperature dust in zone 20** | -25 °C ... 75 °C |
| **Maximum values** | Ui = 12.6 V / Ii =15.9 mA / Pi = 50 mW / Ci = 66.2 nF / Li = 1.2 mH |



EGE-ELEKTRONIK SPEZIAL-SENSOREN GMBH

TEL. +49 4346 41580 . ege-elektronik.com

| | |
|---|---|
| **Material housing** | brass-Ni, PA |
| **Protection [EN 60529]** | IP 67 |
| **Electrical connection** | 2 m PVC-cable 2x0,5 mm² |
| **Note** | with longer cable available on request |

Technical Image

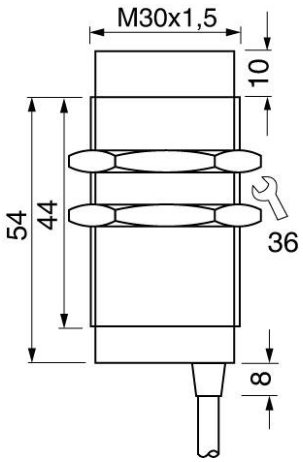


Pin Map

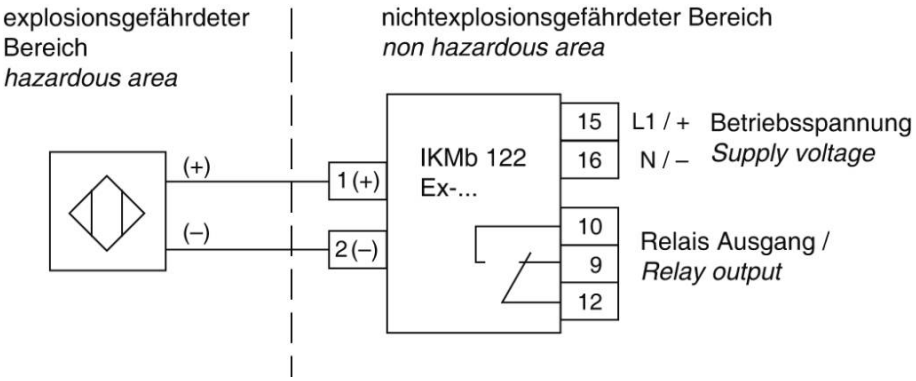




EGE-ELEKTRONIK SPEZIAL-SENSOREN GMBH
TEL. +49 4346 41580 . ege-elektronik.com