Intrinsically safe sensors for zone 0/20 | IGEXHa 02

- Intrinsically safe sensors for zone 0/20
- With ATEX- and IECEx-certification
- Amplifier IKMb... is required for operation
- Sensor for high temperatures up to 140 °C
- Waterproof up to 30 m (IP 68) and resistant to high-pressure cleaning (IP 69)
- Connection: 2 m FEP-cable



M12x1 - sn 2 mm flush

TYPE	IGEXHa 02
Product ID	P31400
Thread/sleeve	M12x1
Operating Distance sn	2 mm flush
Ex area uf use	Zone 0, Zone 1, Zone 20, Zone 21
ATEX Certificate	EPS 17 ATEX 1 173 X
IECEx Certificate	IECEx EPS 17.0087X
UKEX Certificate	EPS 22 UKEX 1 139 X
ATEX marking gas	Ex II 1G Ex ia IIC T6...T3 Ga
ATEX Marking dust	Ex II 1D Ex ia IIIC T_{200}145°C Da
IECEx marking gas	Ex ia IIC T6...T3 Ga
IECEx marking dust	Ex ia IIIC T_{200}145°C Da
Ambient temperature gas zone 0 T6	-25 °C ... 75 °C
Ambient temperature gas zone 0 T5	-25 °C ... 90 °C
Ambient temperature gas zone 0 T4	-25 °C ... 125 °C
Ambient temperature gas zone 0 T3	-25 °C ... 140 °C
Ambient temperature dust in zone 20	-25 °C ... 140 °C
Maximum values	Ui = 12.6 V / Ii =15.9 mA / Pi = 50 mW / Ci = 66.2 nF / Li = 1.2 mH

EGE-ELEKTRONIK SPEZIAL-SENSOREN GMBH
TEL. +49 4346 41580 . ege-elektronik.com

Material housing	stainless steel AISI 316 Ti, PEEK
Protection [EN 60529]	IP 68 (3 bar), IP 69
Electrical connection	2 m FEP-cable 2x0.34 mm²
Note	with longer cable available on request

Technical Image

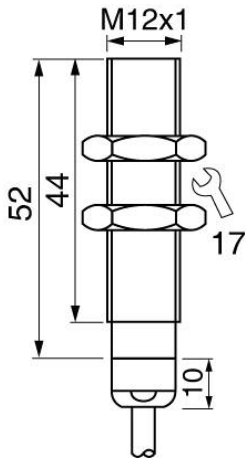

Pin Map

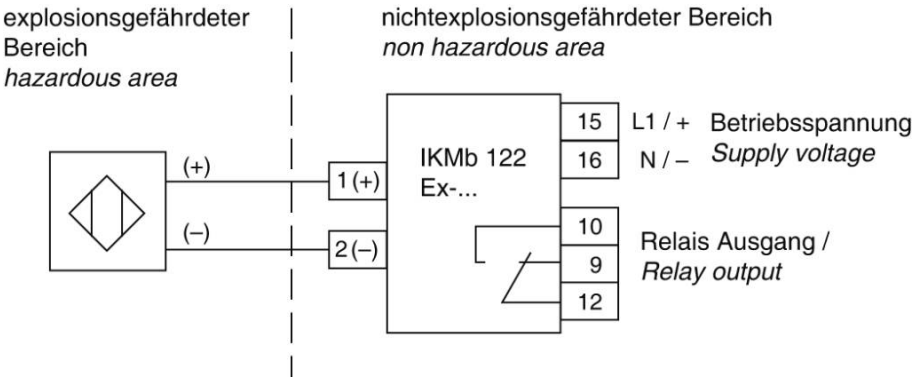

EGE-ELEKTRONIK SPEZIAL-SENSOREN GMBH
TEL. +49 4346 41580 . ege-elektronik.com