Proximity switch for large and long metallic parts | IFE 200/100 GSP

- Inductive proximity switches with large surface up to 150x900 mm
- Switching distance up to 180 mm
- Water-tight IP 68 -
- Humidity-resistant for outdoor use
- Robust design for use under rough industrial conditions
- For the detection of large metal parts such as pipes, profiles, reinforcements, rods, sheet metal, plates, foil



200 x 100 mm - sn 100 mm non flush - output PNP NO

TYPE	IFE 200/100 GSP
Product ID	P31016
Dimensions (l, w)	200, 100
Operating Distance sn	100 mm non-flush
Adjustment range	120 mm
Output	switching output
Output function	PNP-NO
Supply voltage	10 V DC ... 55 V DC
Current consumption max.	4 mA
Switching current max.	400 mA
Short circuit proof	yes
Overcurrent release	430 mA
Reverse polarity protection	✓
Voltage drop max.	2 V
Residual ripple	15 %
Switching frequency	10 Hz
Hysteresis max.	10 %
Ambient temperature	-25 °C ... 75 °C
EMC-class	A
Material housing	aluminum, PVC

EGE-ELEKTRONIK SPEZIAL-SENSOREN GMBH

TEL. +49 4346 41580 . ege-elektronik.com

Display	✓
Protection [EN 60529]	IP 68
Electrical connection	2 m PVC-cable 3x0.5 mm²

Technical Image

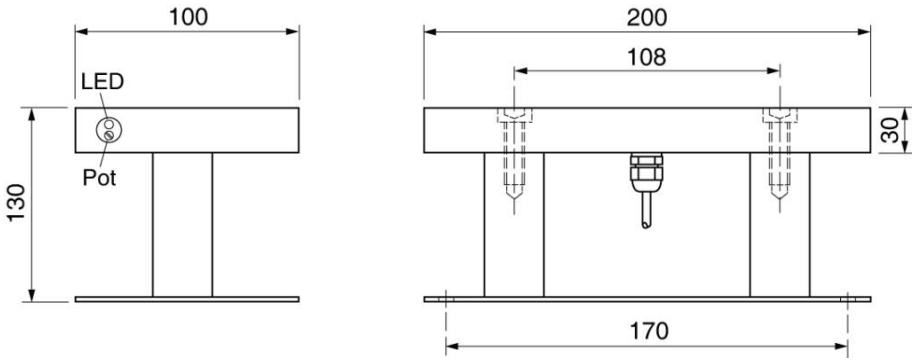

Pin Map

