Revolution counters for gear wheels - up to 150 °C | HGVH 03 GSP

- For the speed measurement of gear wheels
- Magnetic sensor to detect ferro-magnetic materials
- Temperature range -40°...150° C
- IP 68/IP69
- Resistant to high pressure cleaning
- Ffor use under rough industrial conditions

M18x1 - sn 3 mm flush - Output PNP NO



TYPE	HGVH 03 GSP
Product ID	P31364
Thread/sleeve	M18
Operating Distance sn	3 mm flush
Output	switching output
Output function	PNP-NO
Supply voltage	10 V DC ... 30 V DC
Current consumption max.	20 mA
Switching current max.	100 mA
Short circuit proof	yes
Reverse polarity protection	✓
Voltage drop max.	15 V
Switching frequency	6000 Hz
Ambient temperature	-40 °C ... 150 °C
EMC-class	A
Material housing	stainless steel AISI 316 L, stainless steel
Material thread	stainless steel AISI 316 L
Material cap	stainless steel AISI 316 L
Protection [EN 60529]	IP 68 + IP 69K
Electrical connection	2 m FEP-cable 3x0.34 mm²

EGE-ELEKTRONIK SPEZIAL-SENSOREN GMBH
TEL. +49 4346 41580 . ege-elektronik.com

Technical Image

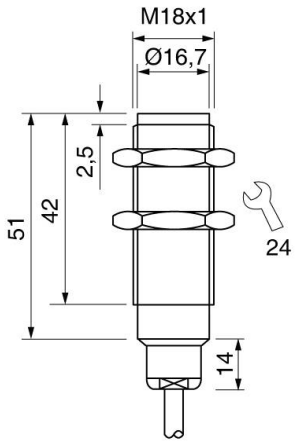

Pin Map

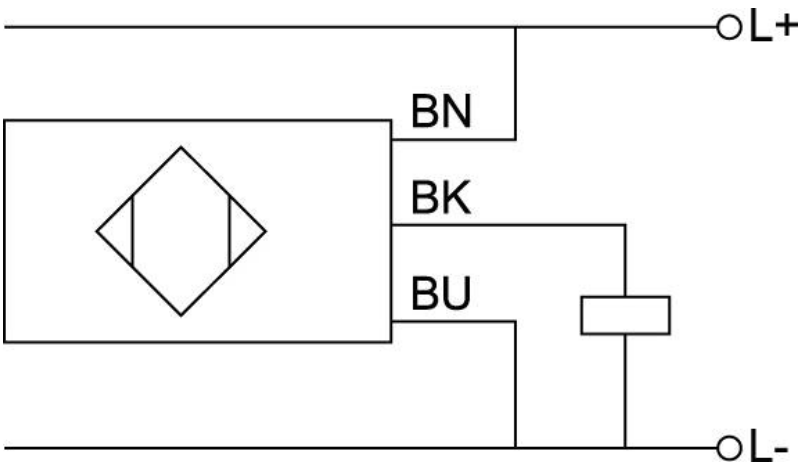

EGE-ELEKTRONIK SPEZIAL-SENSOREN GMBH
TEL. +49 4346 41580 . ege-elektronik.com