Inductive proximity switches with analogue output | IGA 005 GU

- Analogue proximity sensors
- With current or voltage output
- Measuring range 0...10 mm
- Metal sleeve for use in the metal processing
- For the double occupation control of sheet metal

M12x1 - analog range 0...4 mm non flush - Output 0...10 VDC



TYPE	IGA 005 GU
Product ID	P31040
Thread/sleeve	M18x1
Operating Distance sn	non-flush
Analog range	0 mm ... 5 mm
Output	analog output 0...10 V
Supply voltage	18 V DC ... 27 V DC
Current consumption max.	25 mA
Output voltage	11 V
Linearity deviation	5 %
Load resistance RL	2 kΩ
Ambient temperature	-25 °C ... 70 °C
Temperature deviation	10 %
Material housing	brass-Ni, PBT
Material thread	Br-Ni
Material cap	PBT
Protection [EN 60529]	IP 67
Electrical connection	2 m PVC-cable 3x0.5 mm²

EGE-ELEKTRONIK SPEZIAL-SENSOREN GMBH

TEL. +49 4346 41580 . ege-elektronik.com

Technical Image

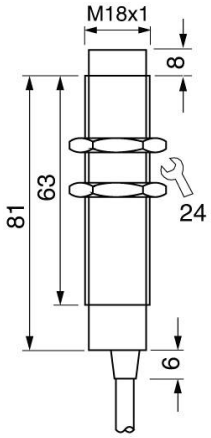

Pin Map

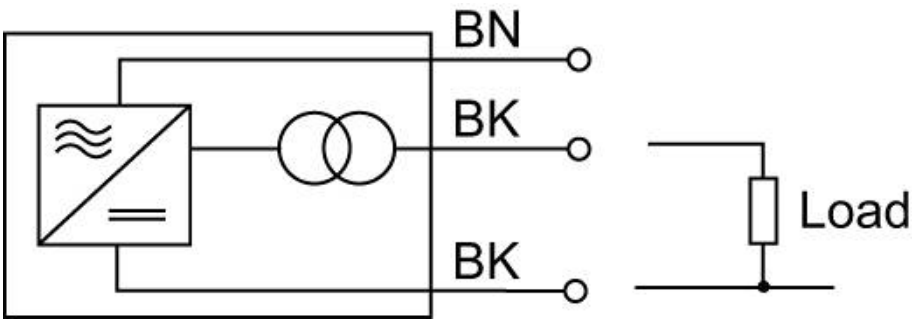

EGE-ELEKTRONIK SPEZIAL-SENSOREN GMBH

TEL. +49 4346 41580 . ege-elektronik.com