Inductive proximity switches with analogue output | IDA 030 GU

- Analogue proximity sensors
- With current or voltage output
- Measuring range 0...30 mm Large switching distance
- For the distance measurement of metals in a hot environment
- For use in the metal processing
- For the double occupation control of sheet metal



Ø80 mm - analog range 0...30 mm non flush - Output 0...10 VDC

TYPE	IDA 030 GU
Product ID	P31043
Thread/sleeve	Ø80 mm
Operating Distance sn	non-flush
Analog range	0 mm ... 30 mm
Output	analog output 0...10 V
Supply voltage	18 V DC ... 27 V DC
Current consumption max.	25 mA
Output voltage	11 V
Linearity deviation	5 %
Load resistance RL	2 kΩ
Ambient temperature	-25 °C ... 70 °C
Temperature deviation	10 %
Material housing	PBT
Protection [EN 60529]	IP 67
Electrical connection	2 m PVC-cable 3x0.5 mm²

Technical Image

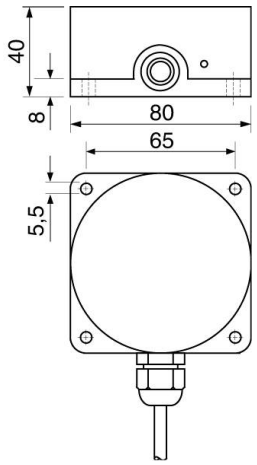

Pin Map

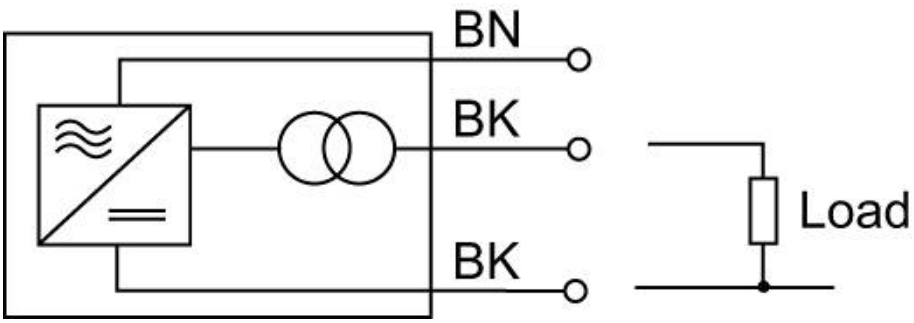

EGE-ELEKTRONIK SPEZIAL-SENSOREN GMBH
TEL. +49 4346 41580 . ege-elektronik.com