Sensors for use at high temperatures | INT100-S180 K

- High temperature up to 200° C
- With PTFE sleeve
- To connect to an external analysis device series INT
- For use at temperatures up to 200° C
- Resistant to aggressive media
- Switching distance up to 50 mm
- For use at high temperatures
- For use in aggressive environments



Ø100 mm - sn 50 mm non flush

TYPE	INT100-S180 K
Product ID	P31103
Operating Distance sn	50 mm non-flush
Adjustment range	10 mm ... 80 mm
Ambient temperature	0 °C ... 180 °C
Limit temperature	200 °C
Temperature deviation	6 %
EMC-class	B
Material housing	PTFE
Material cap	PTFE
Protection [EN 60529]	IP 40
Associated amplifiers	IKM 120 GPP
Technical Image	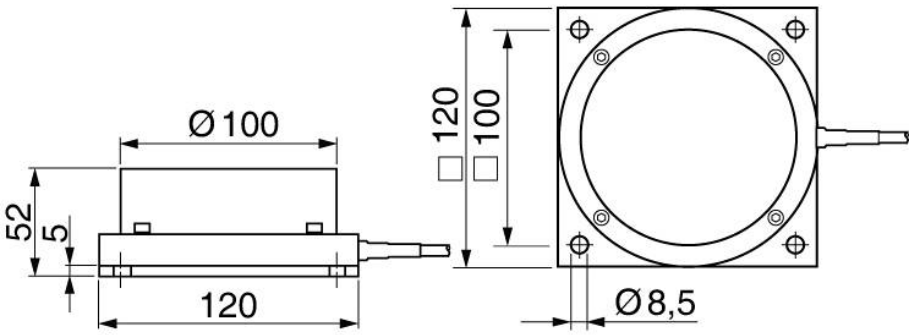

EGE-ELEKTRONIK SPEZIAL-SENSOREN GMBH
TEL. +49 4346 41580 . ege-elektronik.com

Pin Map

