Sensors for use at high temperatures | INT020-S200 K

- High temperature up to 200° C
- With PTFE sleeve
- To connect to an external analysis device series INT
- For use at temperatures up to 200° C
- Resistant to aggressive media
- Switching distance up to 50 mm
- For use at high temperatures
- For use in aggressive environments



Ø36 mm - sn 15 mm non flush

TYPE	INT020-S200 K
Product ID	P31101
Operating Distance sn	15 mm non-flush
Adjustment range	5 mm ... 20 mm
Ambient temperature	0 °C ... 200 °C
Limit temperature	250 °C
Temperature deviation	5 %
EMC-class	B
Material housing	PTFE
Material cap	PTFE
Protection [EN 60529]	IP 40
Associated amplifiers	IKM 120 GPP

EGE-ELEKTRONIK SPEZIAL-SENSOREN GMBH
TEL. +49 4346 41580 . ege-elektronik.com

Technical Image

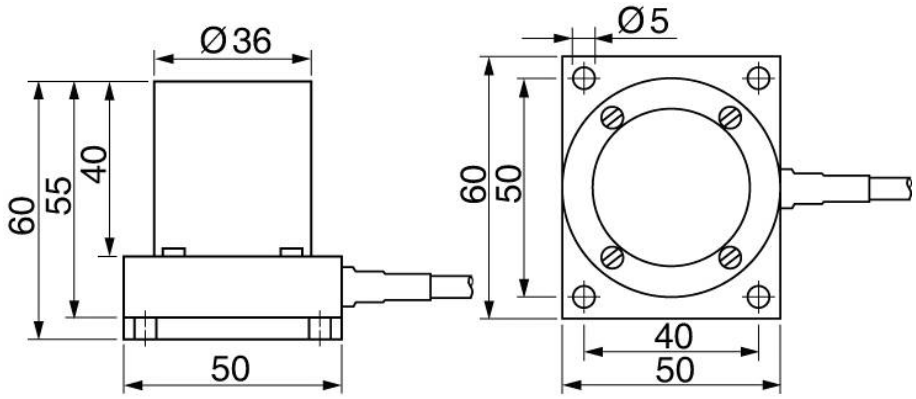

Pin Map

