Sensors for use at high temperatures | IDT 160 GSP

- Inductive proximity switches for the extended temperature range up to 120°
- Variants with up to 110 mm switching distance
- Stable switching behaviour
- Safe detection even of large moving metal parts, such as pipes or steel plates
- For use at temperatures from -25° C to 120 ° C
- Water-tight according to IP 67



Ø160 mm - sn 110 mm non flush - Output PNP NO

TYPE	IDT 160 GSP
Product ID	P31278
Operating Distance sn	110 mm non-flush
Output	switching output
Output function	PNP-NO
Current consumption max.	4 mA
Switching current max.	400 mA
Short circuit proof	yes
Reverse polarity protection	✓
Voltage drop max.	2 V
Switching frequency	20 Hz
Ambient temperature	-25 °C ... 120 °C
EMC-class	A
Material housing	aluminum, PBT
Display	✓
Protection [EN 60529]	IP 67
Electrical connection	2 m silicone-cable 3x0.34 mm²

EGE-ELEKTRONIK SPEZIAL-SENSOREN GMBH
TEL. +49 4346 41580 . ege-elektronik.com

Technical Image

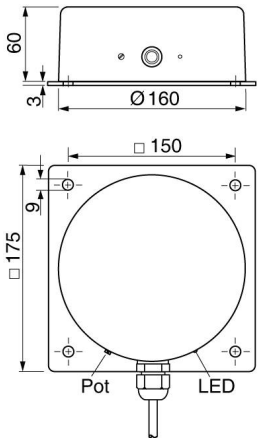

Pin Map

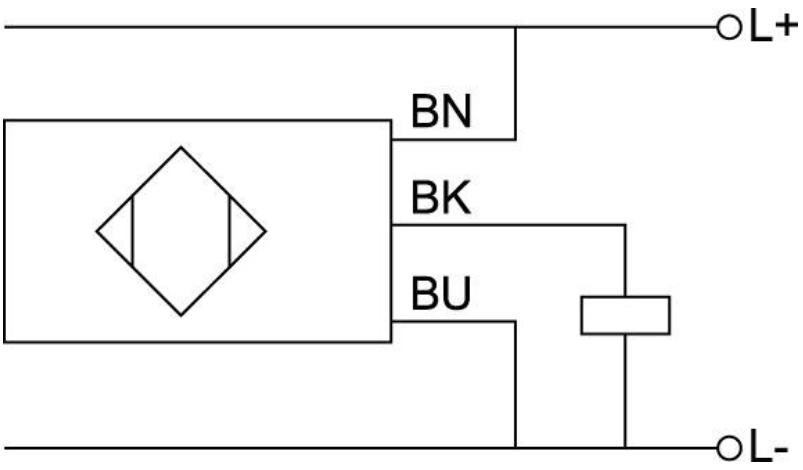

EGE-ELEKTRONIK SPEZIAL-SENSOREN GMBH

TEL. +49 4346 41580 . ege-elektronik.com