Sensors for use at high temperatures | IRHS 040 S250

- High temperature sensors for use at temperatures up to 250° C
- Switching distance up to 40 mm
- With optimised hysteresis for the safe detection of larger moving objects
- High temperature
- Plug connector at the sensor head for rapid and uncomplicated replacement in case of mechanical damage
- Can be used as limit switches or for the position query of trolleys, baskets, workpieces or moulds in drying and furnace technology
- For use in baking lines and belt dryers.

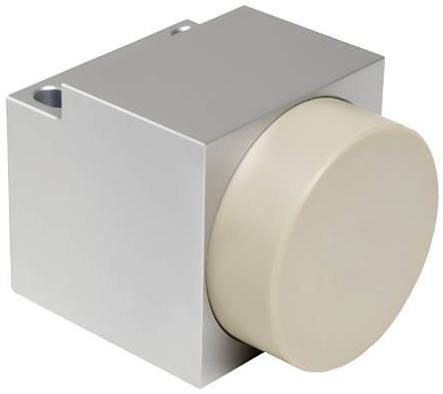

40 x 40 mm - sn 20 mm non flush

TYPE	IRHS 040 S250
Product ID	P31296
Operating Distance sn	20 mm non-flush
Switching frequency	30 Hz
Ambient temperature	0 °C ... 250 °C
EMC-class	A
Material housing	aluminum, PEEK
Protection [EN 60529]	IP 60
Electrical connection	M12 connector
Accessories	For the connection of the sensor to amplifier: metal amoured cable KAP 08-DS5, Z01190, connecting cable SLG 3-2 (Z01076)
Associated amplifiers	IK 030 GSP

EGE-ELEKTRONIK SPEZIAL-SENSOREN GMBH
TEL. +49 4346 41580 . ege-elektronik.com

Technical Image

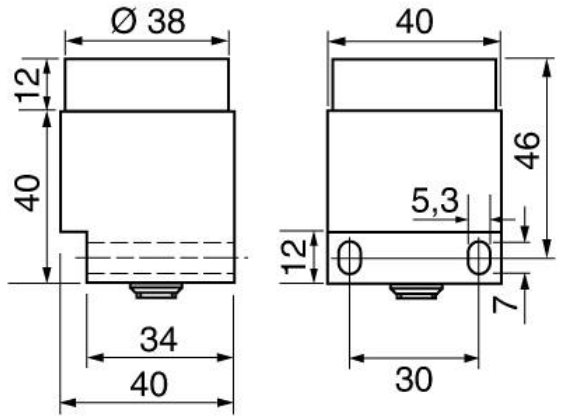

Pin Map

