Sensors for use at high temperatures | IGMH 008 GSP

- For use at temperatures up to 160° C
- Can be used as limit switches or for the position query of trolleys, baskets, workpieces or moulds in drying and furnace technology
- For use in baking lines and belt dryers

M18x1 - sn 8 mm non flush - Output PNP NO



TYPE	IGMH 008 GSP
Product ID	P31162
Thread/sleeve	M18x1
Operating Distance sn	8 mm non-flush
Output	switching output
Output function	PNP-NO
Supply voltage	10 V DC ... 30 V DC
Current consumption max.	7 mA
Residual current	2
Switching current max.	200 mA
Short circuit proof	yes
Reverse polarity protection	✓
Voltage drop max.	2 V
Switching frequency	200 Hz
Ambient temperature	-25 °C ... 160 °C
EMC-class	A
Material housing	stainless steel AISI 316 Ti, PEEK
Material thread	stainless steel AISI 316 Ti (A4)
Material cap	PEEK
Protection [EN 60529]	IP 68 + IP 69K

EGE-ELEKTRONIK SPEZIAL-SENSOREN GMBH
TEL. +49 4346 41580 . ege-elektronik.com

Electrical connection	2 m FEP-cable 3x0.34 mm²

Technical Image

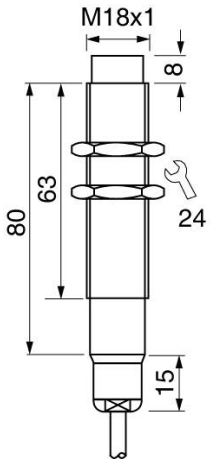

Pin Map

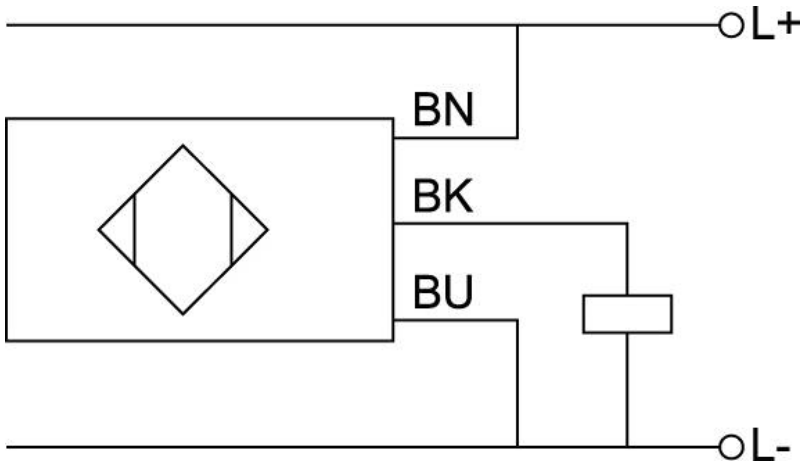

EGE-ELEKTRONIK SPEZIAL-SENSOREN GMBH
TEL. +49 4346 41580 . ege-elektronik.com