Specially sealed sensors - climatic proofed for use in a temperature range up to 120°C | INFW 020 GSP-PZ

Tropical series

- Roller oil resistant
- Armoured cable for connection box GS
- Resistant to roller oil
- Sensor easily replaceable using robust connection box and plug contacts
- For use at temperatures up to 120°C
- For use in environments with seeping aggressive oil/lubricants
- For use in the steel industry



Ø35 mm - sn 20 mm non flush - Output PNP NO

TYPE	INFW 020 GSP-PZ
Product ID	P31444
Thread/sleeve	Ø35
Operating Distance sn	20 mm non-flush
Output	switching output
Output function	PNP-NO
Supply voltage	10...30 V DC
Current consumption max.	4 mA
Switching current max.	200 mA
Switching frequency	500 Hz
Ambient temperature	-25 °C ... 120 °C
EMC-class	A
Material housing	PTFE
Material thread	PTFE
Material cap	PTFE
Display	✓
Protection [EN 60529]	IP 68 + IP 69K
Electrical connection	5 m FEP-cable 3x0.34 mm², armoured cable

EGE-ELEKTRONIK SPEZIAL-SENSOREN GMBH
TEL. +49 4346 41580 . ege-elektronik.com

Technical Image

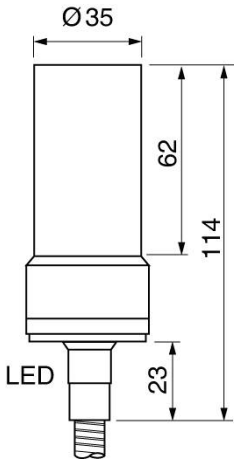

Pin Map

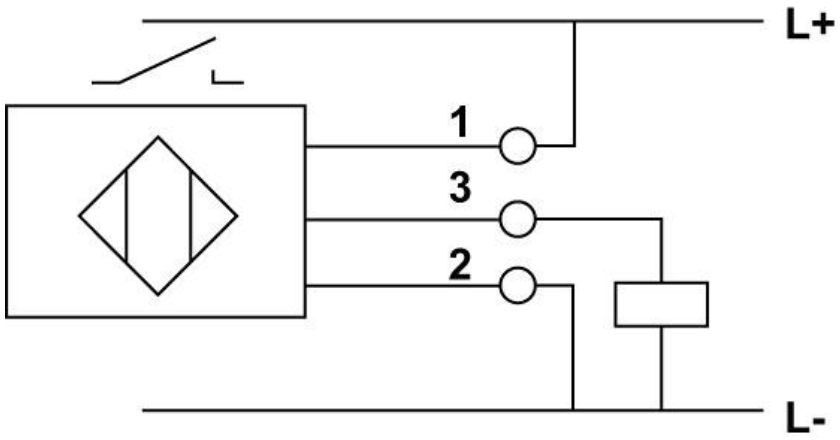

EGE-ELEKTRONIK SPEZIAL-SENSOREN GMBH
TEL. +49 4346 41580 . ege-elektronik.com