Sensors for use at high temperatures | IGMT 005 GSP

- Inductive proximity switches for the extended temperature range up to 120°
- For use at temperatures from -25° C to 120 ° C
- Water-tight according to IP 67
- Variants with up to 110 mm switching distance
- For example, position query of the conveyor belt in belt dryers



M18x1 - sn 5 mm flush - Output PNP NO

TYPE	IGMT 005 GSP
Product ID	P31290
Thread/sleeve	M18x1
Operating Distance sn	5 mm flush
Output	switching output
Output function	PNP-NO
Supply voltage	10...48 V DC
Current consumption max.	4 mA
Switching current max.	200 mA
Short circuit proof	yes
Reverse polarity protection	✓
Voltage drop max.	2 V
Switching frequency	500 Hz
Ambient temperature	-25 °C ... 120 °C
EMC-class	A
Material housing	brass-Ni, PBT
Material thread	Br-Ni
Material cap	PBT
Display	✓
Protection [EN 60529]	IP 67

EGE-ELEKTRONIK SPEZIAL-SENSOREN GMBH
TEL. +49 4346 41580 . ege-elektronik.com

Electrical connection	2 m silicone-cable 3x0.34 mm²

Technical Image

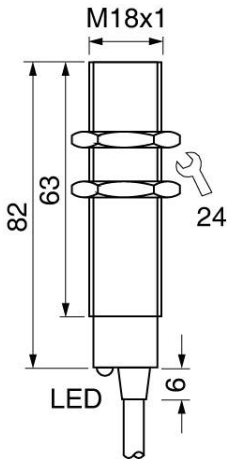

Pin Map

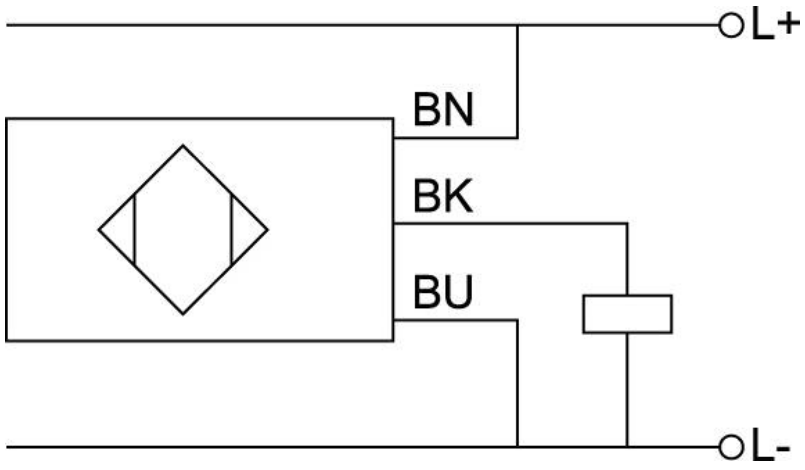

EGE-ELEKTRONIK SPEZIAL-SENSOREN GMBH
TEL. +49 4346 41580 . ege-elektronik.com