Specially sealed sensors - climatic proofed for use in a temperature range up to 120°C | IGMP 02 GSP

- For use at temperatures down to -60° C
- Resistant to high pressure cleaning due to IP 68 / IP 69
- Also available as variant for explosive areas (ATEX, IECEx)
- For outdoor use
- For the detection of baskets, trolleys, valve settings or flaps etc. in refrigeration areas e.g. in the food industry
- For use in the mobile machinery



M12x1 - sn 2 mm flush - Output PNP NO

TYPE	IGMP 02 GSP
Product ID	P31145
Thread/sleeve	M12x1
Operating Distance sn	2 mm flush
Output	switching output
Output function	PNP-NO
Supply voltage	10...30 V DC
Current consumption max.	4 mA
Switching current max.	200 mA
Short circuit proof	yes
Overcurrent release	230 mA
Reverse polarity protection	✓
Voltage drop max.	2 V
Switching frequency	1000 Hz
Ambient temperature	-55 °C ... 60 °C
Limit temperature	-60 °C
Temperature gradient	5 K/min
EMC-class	A
Material housing	stainless steel AISI 316 Ti, stainless steel, PTFE
Material thread	stainless steel AISI 316 Ti (A4)

EGE-ELEKTRONIK SPEZIAL-SENSOREN GMBH
TEL. +49 4346 41580 . ege-elektronik.com

Material cap	PTFE
Display	✓
Protection [EN 60529]	IP 68 + IP 69K
Electrical connection	2 m FEP-cable 3x0.34 mm²

Technical Image

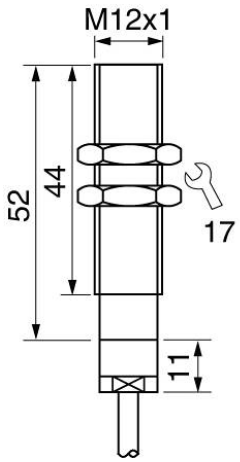

Pin Map

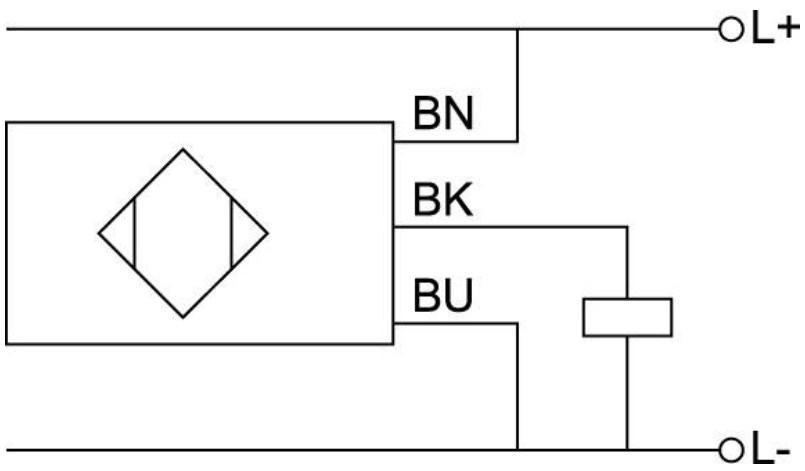

EGE-ELEKTRONIK SPEZIAL-SENSOREN GMBH
TEL. +49 4346 41580 . ege-elektronik.com