Specially sealed sensors - climatic proofed for use in a temperature range up to 120°C | IDKW 120 GSP

- Safe object detection of large moving objects thanks to optimised hysteresis
- Large switching distances up to 90 mm
- Optimised for use in cleaning processes
- For uninterrupted use in rinsing and washing plant
- For the reliable detection of baskets and trolleys
- High-pressure cleaning resistant

Ø120 mm - sn 90 mm non flush - Output PNP NO



TYPE	IDKW 120 GSP
Product ID	P31177
Operating Distance sn	90 mm non-flush
Output	switching output
Output function	PNP-NO
Supply voltage	10 V DC ... 30 V DC
Current consumption max.	10 mA
Switching current max.	300 mA
Voltage drop max.	2 V
Switching frequency	30 Hz
Hysteresis max.	10 %
Ambient temperature	-20 °C ... 110 °C
Limit temperature	120 °C
Temperature deviation	10 %
EMC-class	A
Material housing	stainless steel AISI 316 Ti, stainless steel, PP
Material cap	PP
Protection [EN 60529]	IP 68 + IP 69K

EGE-ELEKTRONIK SPEZIAL-SENSOREN GMBH
TEL. +49 4346 41580 . ege-elektronik.com

Technical Image

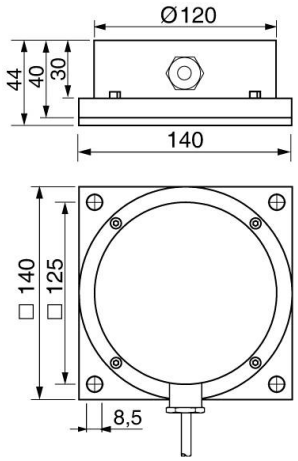

Pin Map

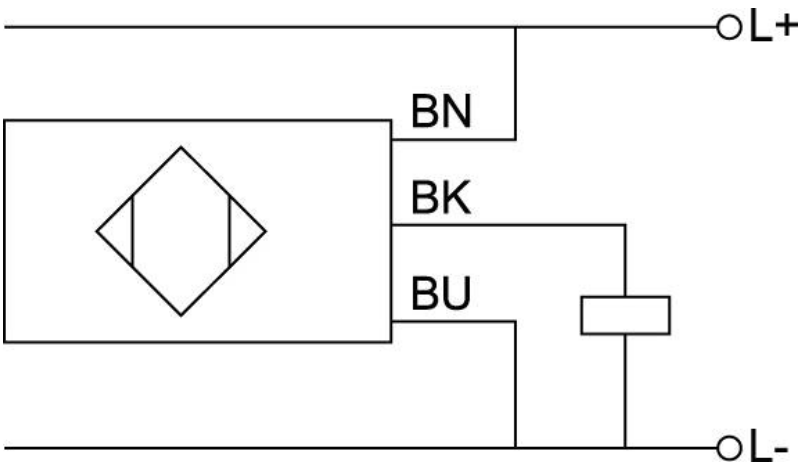

EGE-ELEKTRONIK SPEZIAL-SENSOREN GMBH

TEL. +49 4346 41580 . ege-elektronik.com