Specially sealed sensors - climatic proofed for use in a temperature range up to 120°C | IGMF 04 GSP

- Inductive proximity switches resistant against electromagnetic interference which might arise from cables or radiation.
- For use in systems with challenging EMC conditions
- Customer-specific adaptations
- For the detection of metallic objects,
- presence detection,
- Position and movement monitoring,
- Object counting and
- Speed control on conveyor belts



M12x1 - sn 4 mm non flush - Output PNP NO

TYPE	IGMF 04 GSP
Product ID	P31133
Thread/sleeve	M12x1
Operating Distance sn	4 mm non-flush
Output	switching output
Output function	PNP-NO
Supply voltage	10...30 V DC
Current consumption max.	4 mA
Residual current	1
Switching current max.	200 mA
Overcurrent release	230 mA
Voltage drop max.	2 V
Residual ripple	10 %
Switching frequency	1000 Hz
Ambient temperature	-25 °C ... 120 °C
EMC-class	A
Material housing	stainless steel AISI 316 Ti, stainless steel, PTFE
Material thread	stainless steel AISI 316 Ti (A4)

EGE-ELEKTRONIK SPEZIAL-SENSOREN GMBH

TEL. +49 4346 41580 . ege-elektronik.com

Material cap	PTFE
Protection [EN 60529]	IP 68 + IP 69K
Electrical connection	2 m FEP-cable 3x0.34 mm²

Technical Image

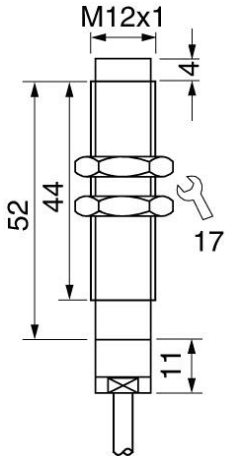

Pin Map

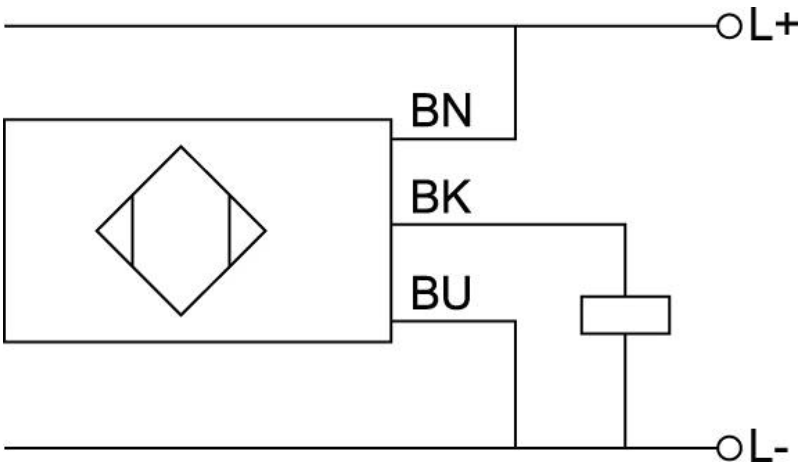

EGE-ELEKTRONIK SPEZIAL-SENSOREN GMBH
TEL. +49 4346 41580 . ege-elektronik.com