Specially sealed sensors - climatic proofed for use in a temperature range up to 120°C | IGFW 010 GSP

- For use in wet and warm processes and aggressive fluids
- Resistant to roller oil
- For use at temperatures up to 120°C
- Climatic proofed
- For use in environments with heavily seeping oil
- For use in the steel industry



M30x1.5 - sn 10 mm flush - Output PNP NO

TYPE	IGFW 010 GSP
Product ID	P31440
Thread/sleeve	M30x1,5
Operating Distance sn	10 mm flush
Temperature deviation (25...70°C)	10 %
Temperature deviation (25...120°C)	20 %
Output	switching output
Output function	PNP-NO
Supply voltage	10...30 V DC
Current consumption max.	4 mA
Switching current max.	200 mA
Overcurrent release	230 mA
Reverse polarity protection	✓
Voltage drop max.	2 V
Residual ripple	10 %
Switching frequency	1000 Hz
Ambient temperature	-25 °C ... 120 °C
EMC-class	A
Material housing	PTFE

EGE-ELEKTRONIK SPEZIAL-SENSOREN GMBH
TEL. +49 4346 41580 . ege-elektronik.com

Material thread	PTFE
Material cap	PTFE
Protection [EN 60529]	IP 68 + IP 69K
Technical Image	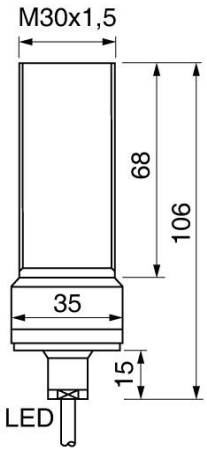
Pin Map	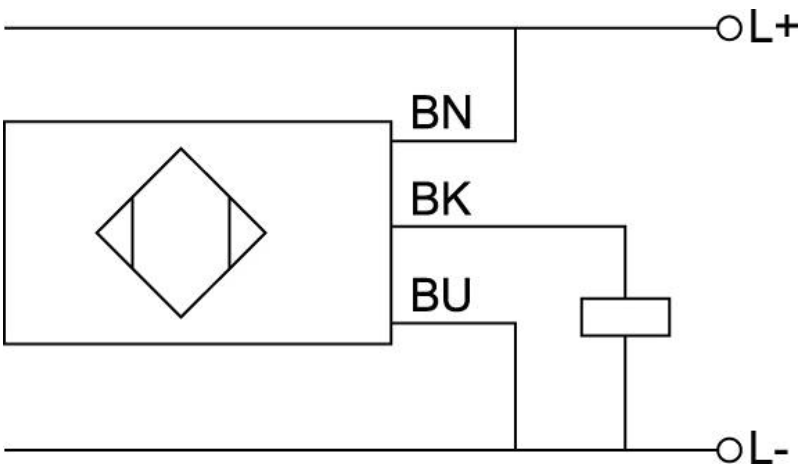

EGE-ELEKTRONIK SPEZIAL-SENSOREN GMBH
TEL. +49 4346 41580 . ege-elektronik.com