Specially sealed sensors - climatic proofed for use in a temperature range up to 120°C

| IGMW 015 GSP

- For use at temperatures up to 120°C
- Climatic proofed Water-tight and resistant to high pressure cleaning
- Particularly resistant to steam
- For use in cleaning processes
- For use in cooking processes

M30x1.5 - sn 15 mm non flush - Output PNP NO



TYPE	IGMW 015 GSP
Product ID	P31438
Thread/sleeve	M30x1,5
Operating Distance sn	15 mm non-flush
Output	switching output
Output function	PNP-NO
Supply voltage	10...30 V DC
Current consumption max.	4 mA
Residual current	1
Switching current max.	200 mA
Overcurrent release	230 mA
Voltage drop max.	2 V
Switching frequency	1000 Hz
Ambient temperature	-25 °C ... 120 °C
EMC-class	A
Material housing	stainless steel AISI 316 Ti, stainless steel, PTFE
Material thread	stainless steel AISI 316 Ti (A4)
Material cap	PTFE
Protection [EN 60529]	IP 68 + IP 69K

EGE-ELEKTRONIK SPEZIAL-SENSOREN GMBH
TEL. +49 4346 41580 . ege-elektronik.com

Electrical connection	2 m FEP-cable 3x0.34 mm²
Technical Image	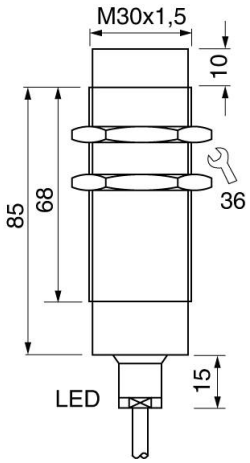
Pin Map	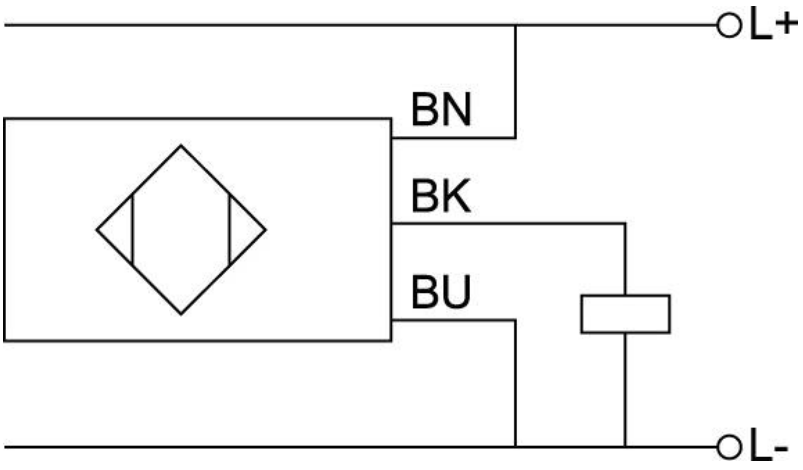

EGE-ELEKTRONIK SPEZIAL-SENSOREN GMBH

TEL. +49 4346 41580 . ege-elektronik.com