Inductive sensors for high mechanical loads
| IGVU 02 GSP-C

- One piece from stainless steel
- Especially impact-proof
- Resistant to vibration and shock
- With PTFE-coating against adhesion and dirt

M12x1 - sn 2 mm flush - Output PNP NO



TYPE	IGVU 02 GSP-C
Product ID	P31234
Thread/sleeve	M12x1
Operating Distance sn	2 mm flush
Output	switching output
Output function	PNP-NO
Supply voltage	10 V DC ... 30 V DC
Current consumption max.	5 mA
Switching current max.	250 mA
Short circuit proof	yes
Reverse polarity protection	✓
Voltage drop max.	1.5 V
Switching frequency	180 Hz
Ambient temperature	-25 °C ... 80 °C
EMC-class	A
Material housing	stainless steel AISI 316 L, stainless steel, PTFE
Material thread	stainless steel AISI 316 Ti (A4)
Material cap	stainless steel AISI 316 L, PTFE
Display	✓
Protection [EN 60529]	IP 68 + IP 69K

EGE-ELEKTRONIK SPEZIAL-SENSOREN GMBH

TEL. +49 4346 41580 . ege-elektronik.com

Electrical connection	M12 connector

Technical Image

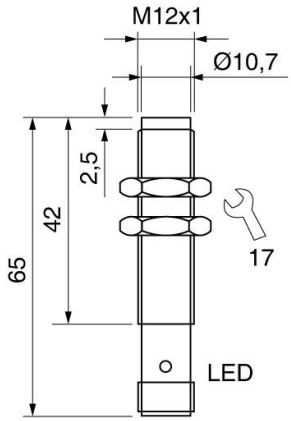

Pin Map

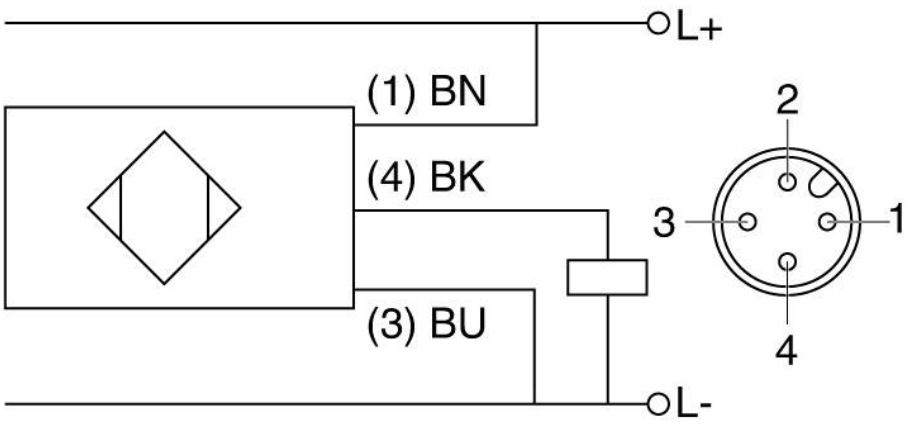

EGE-ELEKTRONIK SPEZIAL-SENSOREN GMBH
TEL. +49 4346 41580 . ege-elektronik.com