Inductive sensor of high standard / for heightened requirements | IGMU 105 GSP

- Inductive proximity switches resistant against electromagnetic interference which might arise from cables or radiation.
- For use in systems with challenging EMC conditions
- Customer-specific adaptations
- For the detection of metallic objects,
- presence detection,
- Position and movement monitoring,
- Object counting and
- Speed control on conveyor belts



M18x1 - sn 5 mm flush - Output PNP NO

TYPE	IGMU 105 GSP
Product ID	P31112
Thread/sleeve	M18x1
Operating Distance sn	5 mm flush
Output	switching output
Output function	PNP-NO
Supply voltage	10...30 V DC
Current consumption max.	1 mA
Switching current max.	200 mA
Short circuit proof	yes
Overcurrent release	250 mA
Reverse polarity protection	✓
Voltage drop max.	1.5 V
Switching frequency	500 Hz
Ambient temperature	-25 °C ... 70 °C
EMC-class	A
Material housing	brass-Ni, PPO
Material thread	Br-Ni
Material cap	PPO
Display	✓

EGE-ELEKTRONIK SPEZIAL-SENSOREN GMBH
TEL. +49 4346 41580 . ege-elektronik.com

Protection [EN 60529]	IP 67
Electrical connection	M12 connector

Technical Image

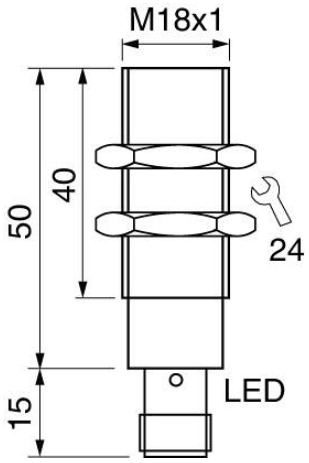

Pin Map

