Inductive sensor of high standard / for heightened requirements | IGM 102 GSP

- Inductive proximity switches resistant against electromagnetic interference which might arise from cables or radiation.
- For use in systems with challenging EMC conditions
- Customer-specific adaptations
- For the detection of metallic objects,
- presence detection,
- Position and movement monitoring,
- Object counting and
- Speed control on conveyor belts



M12x1 - sn 2 mm flush - Output PNP NO

TYPE	IGM 102 GSP
Product ID	P31104
Thread/sleeve	M12x1
Operating Distance sn	2 mm flush
Output	switching output
Output function	PNP-NO
Supply voltage	10...30 V DC
Current consumption max.	5 mA
Switching current max.	200 mA
Short circuit proof	yes
Overcurrent release	250 mA
Reverse polarity protection	✓
Voltage drop max.	2 V
Switching frequency	800 Hz
Ambient temperature	-25 °C ... 70 °C
EMC-class	A
Material housing	brass-Ni, PPO
Material thread	Br-Ni
Material cap	PPO
Display	✓

EGE-ELEKTRONIK SPEZIAL-SENSOREN GMBH
TEL. +49 4346 41580 . ege-elektronik.com

Protection [EN 60529]	IP 67

Technical Image

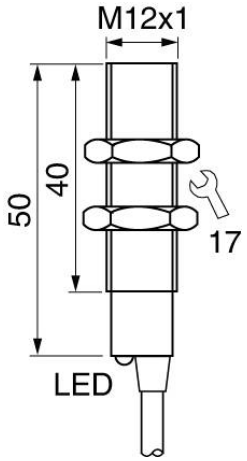

Pin Map

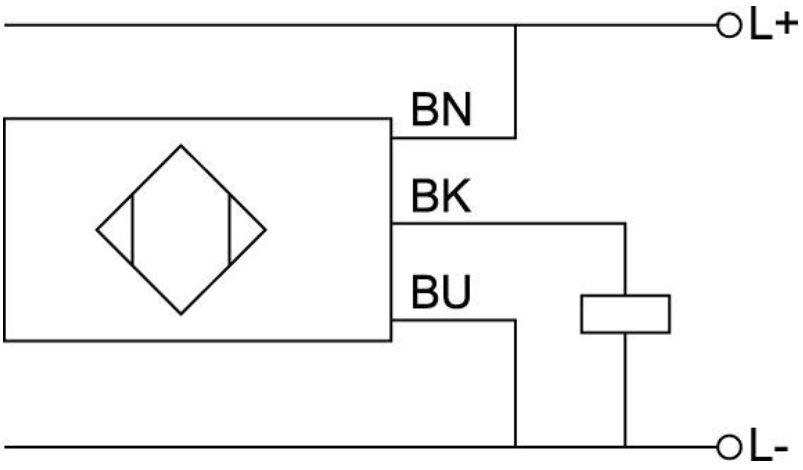

EGE-ELEKTRONIK SPEZIAL-SENSOREN GMBH

TEL. +49 4346 41580 . ege-elektronik.com