Inductive sensors for high mechanical loads | IGVW 05 GSP

- Solid stainless steel sensor
- Climatic proofed and water-tight
- Resistant to high pressure cleaning up to 110° C,
- Protection class IP 68 / IP 69
- Resistant to vibration and shock
- For use in cleaning areas
- For use during refining processes



M18x1 - sn 5 mm flush - Output PNP NO

TYPE	IGVW 05 GSP
Product ID	P31238
Thread/sleeve	M18x1
Operating Distance sn	5 mm flush
Output	switching output
Output function	PNP-NO
Supply voltage	10 V DC ... 30 V DC
Current consumption max.	5 mA
Switching current max.	250 mA
Short circuit proof	yes
Reverse polarity protection	✓
Voltage drop max.	1.5 V
Switching frequency	180 Hz
Ambient temperature	-10 °C ... 110 °C
EMC-class	A
Material housing	stainless steel AISI 316 L, stainless steel
Material thread	stainless steel AISI 316 L
Material cap	stainless steel AISI 316 L
Protection [EN 60529]	IP 68 + IP 69K
Electrical connection	2 m FEP-cable 3x0.34 mm²

EGE-ELEKTRONIK SPEZIAL-SENSOREN GMBH
TEL. +49 4346 41580 . ege-elektronik.com

Technical Image

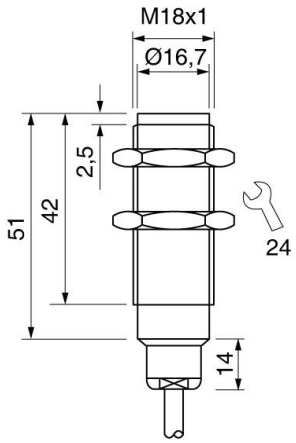

Pin Map

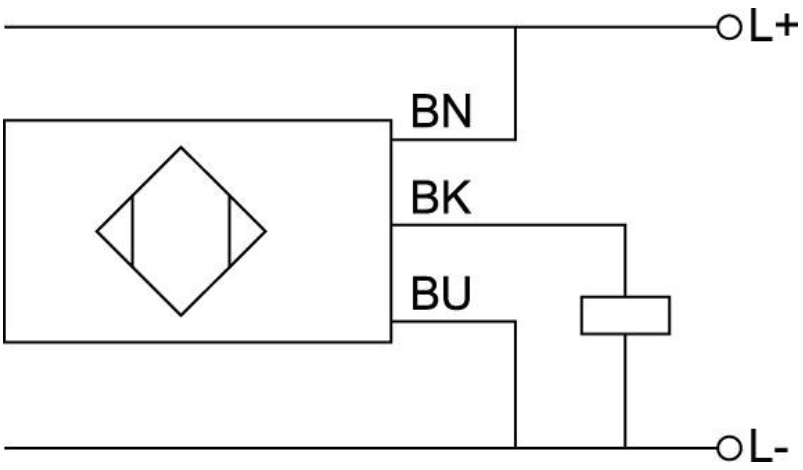

EGE-ELEKTRONIK SPEZIAL-SENSOREN GMBH
TEL. +49 4346 41580 . ege-elektronik.com