Inductive sensor of high standard / for heightened requirements | IDU 200 GSP

- ID for heightened requirements and increased switching distances Inductive proximity switches with high switching distances and simultaneously excellent resistance to electromagnetic interference
- Stable switching behaviour
- Safe detection even of large moving metal parts, such as pipes or steel plates
- For use in steel production or metal processing
- To detected large workpieces



Ø200 mm - sn 140 mm non flush - Output PNP NO

TYPE	IDU 200 GSP
Product ID	P31327
Operating Distance sn	140 mm non-flush
Adjustment range	40 mm ... 170 mm
Output	switching output
Output function	PNP-NO
Supply voltage	10...55 V DC
Current consumption max.	4 mA
Switching current max.	400 mA
Short circuit proof	yes
Reverse polarity protection	✓
Voltage drop max.	2 V
Switching frequency	20 Hz
Ambient temperature	-25 °C ... 75 °C
EMC-class	A
Material housing	aluminum, PBT
Display	✓
Protection [EN 60529]	IP 67
Electrical connection	M12 connector

EGE-ELEKTRONIK SPEZIAL-SENSOREN GMBH

TEL. +49 4346 41580 . ege-elektronik.com

Technical Image

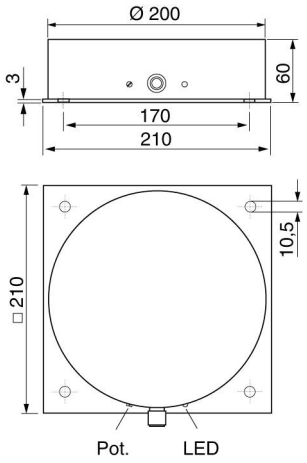

Pin Map

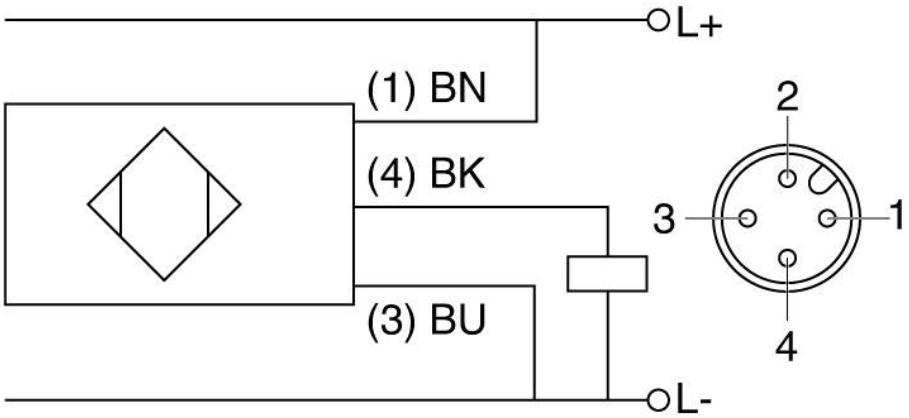

EGE-ELEKTRONIK SPEZIAL-SENSOREN GMBH

TEL. +49 4346 41580 . ege-elektronik.com