Specially sealed sensors - climatic proofed for use in a temperature range up to 120°C | INFW 020 GSP

- For use in wet and warm processes and aggressive fluids
- Resistant to roller oil
- For use at temperatures up to 120°C
- Climatic proofed
- For use in environments with heavily seeping oil
- For use in the steel industry

Ø35 mm - sn 19 mm non flush - Output PNP NO



TYPE	INFW 020 GSP
Product ID	P31442
Thread/sleeve	Ø35
Operating Distance sn	19 mm non-flush
Temperature deviation (25...70°C)	10 %
Temperature deviation (25...120°C)	20 %
Output	switching output
Output function	PNP-NO
Supply voltage	10...30 V DC
Current consumption max.	4 mA
Switching current max.	200 mA
Overcurrent release	230 mA
Reverse polarity protection	✓
Voltage drop max.	2 V
Residual ripple	10 %
Switching frequency	500 Hz
Ambient temperature	-25 °C ... 120 °C
EMC-class	A
Material housing	PTFE

EGE-ELEKTRONIK SPEZIAL-SENSOREN GMBH
TEL. +49 4346 41580 . ege-elektronik.com

Protection [EN 60529]	IP 68 + IP 69K
Electrical connection	2 m FEP-cable 3x0.34 mm²

Technical Image

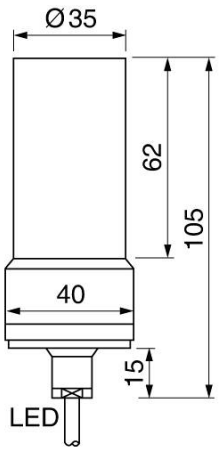

Pin Map

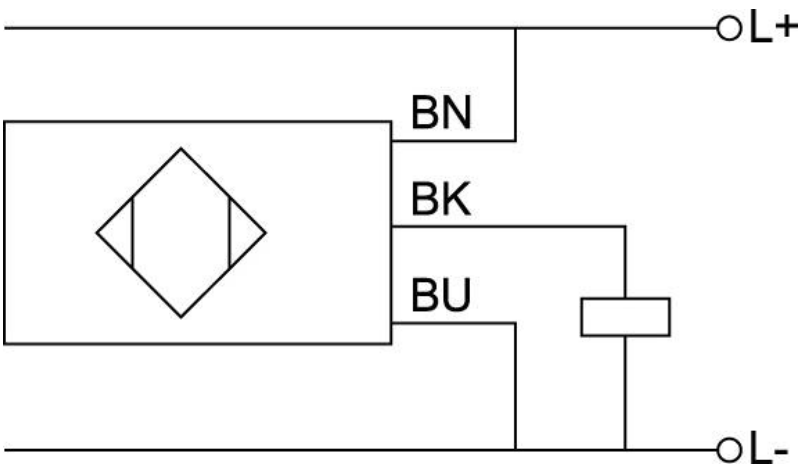

EGE-ELEKTRONIK SPEZIAL-SENSOREN GMBH
TEL. +49 4346 41580 . ege-elektronik.com