Inductive sensor of high standard / for heightened requirements | IGMS 010 WP

- Inductive proximity switches resistant against electromagnetic interference which might arise from cables or radiation.
- For use in systems with challenging EMC conditions
- Customer-specific adaptations
- For the detection of metallic objects,
- presence detection,
- Position and movement monitoring,
- Object counting and
- Speed control on conveyor belts

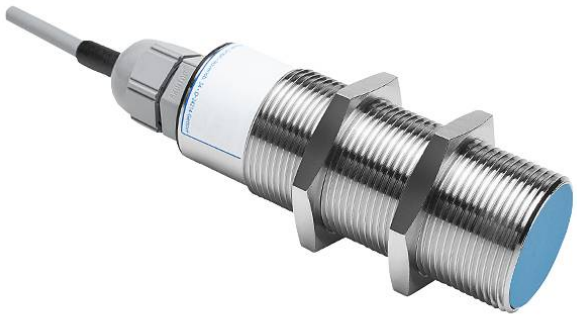

M30x1,5 - sn 10 mm flush - Output 2-wire AC programmable

TYPE	IGMS 010 WP
Product ID	P30015
Thread/sleeve	M30x1,5
Operating Distance sn	10 mm flush
Output	switching output
Supply voltage	20...250 V AC
Current consumption max.	2.5 mA
Switching current max.	400 mA
Short circuit proof	no
Voltage drop max.	6 V
Minimum load current	5 mA
Switching frequency	25 Hz
Ambient temperature	-25 °C ... 75 °C
EMC-class	A
Material housing	brass-Ni, PBT
Material thread	Br-Ni
Material cap	PBT
Display	✓
Protection [EN 60529]	IP 67

EGE-ELEKTRONIK SPEZIAL-SENSOREN GMBH
TEL. +49 4346 41580 . ege-elektronik.com

Electrical connection	2 m PVC-cable 2x0,5 mm²
Technical Image	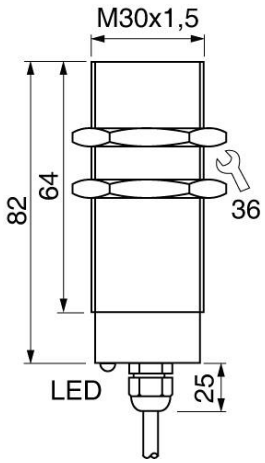
Pin Map	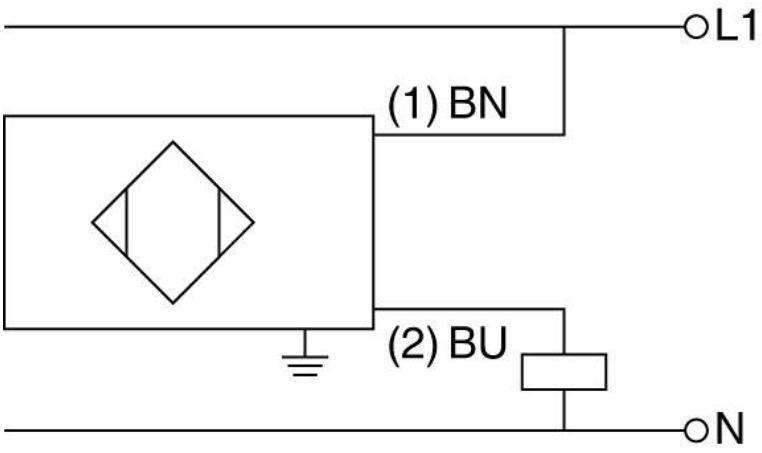

EGE-ELEKTRONIK SPEZIAL-SENSOREN GMBH
TEL. +49 4346 41580 . ege-elektronik.com