Inductive sensors for high mechanical loads
| IGV 10 GSP

- One piece from stainless steel
- Especially resistant to vibration and shocks
- for use in mobile machines and heavy duty applications

M30x1.5 - sn 10 mm flush - Output PNP NO



TYPE	IGV 10 GSP
Product ID	P31230
Thread/sleeve	M30x1,5
Operating Distance sn	10 mm flush
Output	switching output
Output function	PNP-NO
Supply voltage	10 V DC ... 30 V DC
Current consumption max.	5 mA
Switching current max.	250 mA
Short circuit proof	yes
Reverse polarity protection	✓
Voltage drop max.	1.5 V
Switching frequency	150 Hz
Ambient temperature	-25 °C ... 80 °C
EMC-class	A
Material housing	stainless steel AISI 316 L, stainless steel
Material thread	stainless steel AISI 316 L
Material cap	stainless steel AISI 316 L
Display	✓
Protection [EN 60529]	IP 67

EGE-ELEKTRONIK SPEZIAL-SENSOREN GMBH

TEL. +49 4346 41580 . ege-elektronik.com

Electrical connection	2 m PVC-cable 3x0.34 mm²

Technical Image

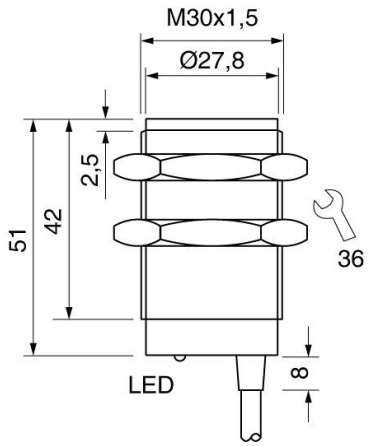

Pin Map

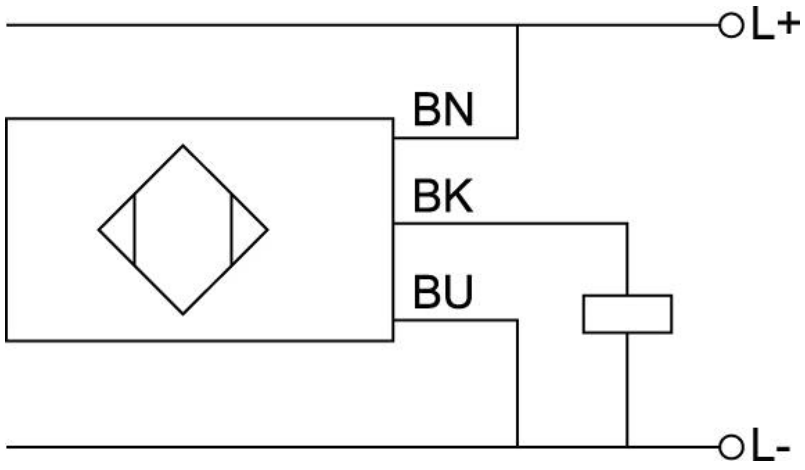

EGE-ELEKTRONIK SPEZIAL-SENSOREN GMBH
TEL. +49 4346 41580 . ege-elektronik.com