Inductive sensor of high standard / for heightened requirements | IGMU 008 GSP

- Inductive proximity switches resistant against electromagnetic interference which might arise from cables or radiation.
- For use in systems with challenging EMC conditions
- Customer-specific adaptations
- For the detection of metallic objects,
- presence detection,
- Position and movement monitoring,
- Object counting and
- Speed control on conveyor belts



M18x1 - sn 8 mm non flush - Output PNP NO

TYPE	IGMU 008 GSP
Product ID	P31314
Thread/sleeve	M18x1
Operating Distance sn	8 mm non-flush
Output	switching output
Output function	PNP-NO
Supply voltage	10...48 V DC
Current consumption max.	2.5 mA
Switching current max.	200 mA
Short circuit proof	yes
Reverse polarity protection	✓
Voltage drop max.	2 V
Switching frequency	500 Hz
Ambient temperature	-25 °C ... 75 °C
EMC-class	A
Material housing	brass-Ni, PBT
Material thread	Br-Ni
Material cap	PBT
Display	✓
Protection [EN 60529]	IP 67

EGE-ELEKTRONIK SPEZIAL-SENSOREN GMBH
TEL. +49 4346 41580 . ege-elektronik.com

Electrical connection	M12 connector

Technical Image

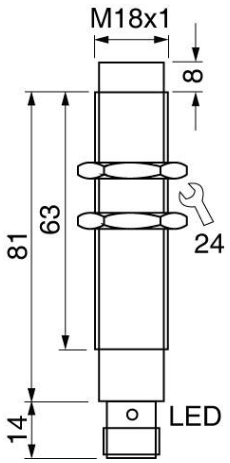

Pin Map

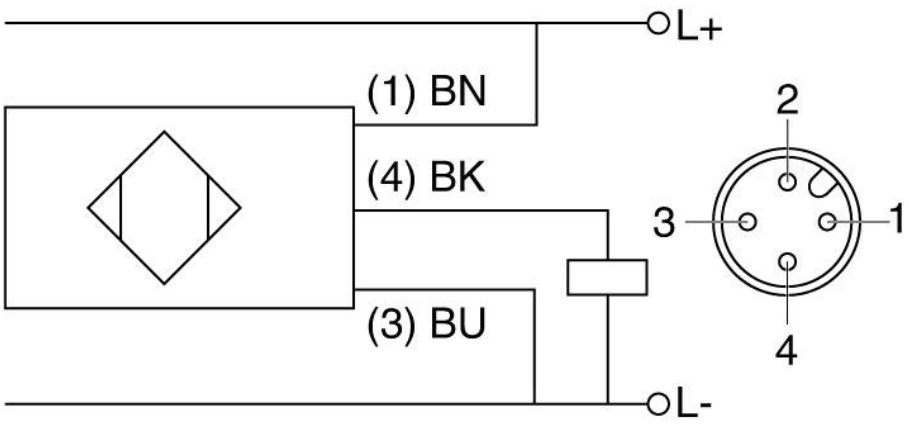

EGE-ELEKTRONIK SPEZIAL-SENSOREN GMBH
TEL. +49 4346 41580 . ege-elektronik.com