# Inductive sensor of high standard / for heightened requirements | IGMU 005 GSP

- Inductive proximity switches resistant against electromagnetic interference which might arise from cables or radiation.
- For use in systems with challenging EMC conditions
- Customer-specific adaptations
- For the detection of metallic objects,
- presence detection,
- Position and movement monitoring,
- Object counting and
- Speed control on conveyor belts



## M18x1 - sn 5 mm flush - Output PNP NO

| | |
|---|---|
| **TYPE** | IGMU 005 GSP |
| **Product ID** | P31313 |
| **Thread/sleeve** | M18x1 |
| **Operating Distance sn** | 5 mm flush |
| **Output** | switching output |
| **Output function** | PNP-NO |
| **Supply voltage** | 10...48 V DC |
| **Current consumption max.** | 2.5 mA |
| **Switching current max.** | 200 mA |
| **Short circuit proof** | yes |
| **Reverse polarity protection** | ✓ |
| **Voltage drop max.** | 2 V |
| **Switching frequency** | 500 Hz |
| **Ambient temperature** | -25 °C ... 75 °C |
| **EMC-class** | A |
| **Material housing** | brass-Ni, PBT |
| **Material thread** | Br-Ni |
| **Material cap** | PBT |
| **Display** | ✓ |
| **Protection [EN 60529]** | IP 67 |



EGE-ELEKTRONIK SPEZIAL-SENSOREN GMBH
TEL. +49 4346 41580 . ege-elektronik.com

| Electrical connection | M12 connector |
|---|---|

Technical Image

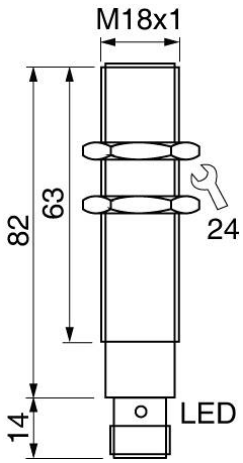


Pin Map

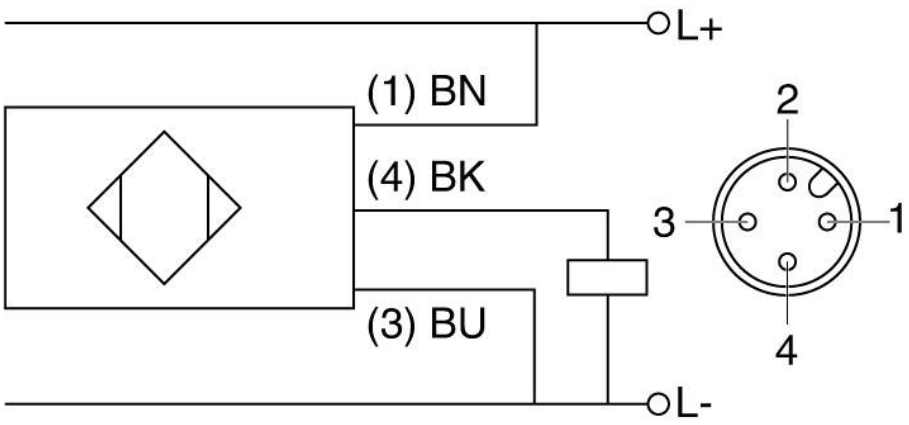




EGE-ELEKTRONIK SPEZIAL-SENSOREN GMBH
TEL. +49 4346 41580 . ege-elektronik.com