Inductive sensor of high standard / for heightened requirements | IGMU 10 GSP

- Inductive proximity switches resistant against electromagnetic interference which might arise from cables or radiation.
- For use in systems with challenging EMC conditions
- Customer-specific adaptations
- For the detection of metallic objects,
- presence detection,
- Position and movement monitoring,
- Object counting and
- Speed control on conveyor belts



M30x1.5 - sn 10 mm flush - Output PNP NO

TYPE	IGMU 10 GSP
Product ID	P31307
Thread/sleeve	M30x1,5
Operating Distance sn	10 mm flush
Output	switching output
Output function	PNP-NO
Supply voltage	10...48 V DC
Current consumption max.	2.5 mA
Switching current max.	200 mA
Short circuit proof	yes
Reverse polarity protection	✓
Voltage drop max.	2 V
Switching frequency	500 Hz
Ambient temperature	-25 °C ... 75 °C
EMC-class	A
Material housing	brass-Ni, PBT
Material thread	Br-Ni
Material cap	PBT
Display	✓
Protection [EN 60529]	IP 67

EGE-ELEKTRONIK SPEZIAL-SENSOREN GMBH
TEL. +49 4346 41580 . ege-elektronik.com

Electrical connection	M12 connector

Technical Image

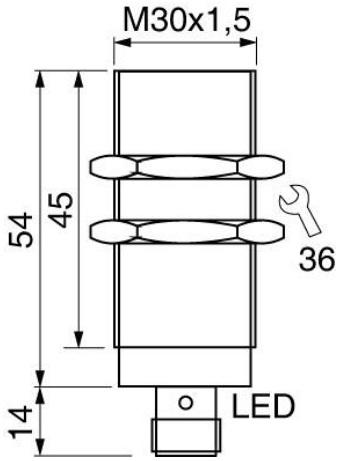

Pin Map

