Inductive sensor of high standard / for heightened requirements | INKS 010 GPP

- Inductive proximity switches for industry and automation
- Good value for money Sensors
- With smooth plastic sleeve
- Customer-specific adaptations
- For the detection of metallic objects
- Presence detection
- Position and movement monitoring
- Object counting and speed control on conveyor belts



Ø20 mm - sn 10 mm non flush - Output PNP programmable

TYPE	INKS 010 GPP
Product ID	P30158
Operating Distance sn	10 mm non-flush
Output	switching output
Supply voltage	10 V DC ... 55 V DC
Current consumption max.	2.5 mA
Switching current max.	400 mA
Short circuit proof	yes
Overcurrent release	450 mA
Reverse polarity protection	✓
Voltage drop max.	2 V
Switching frequency	1500 Hz
Ambient temperature	-25 °C ... 75 °C
EMC-class	A
Material housing	PBT
Material cap	PBT
Display	✓
Protection [EN 60529]	IP 67
Electrical connection	2 m PVC-cable 3x0.5 mm²

EGE-ELEKTRONIK SPEZIAL-SENSOREN GMBH
TEL. +49 4346 41580 . ege-elektronik.com

Technical Image

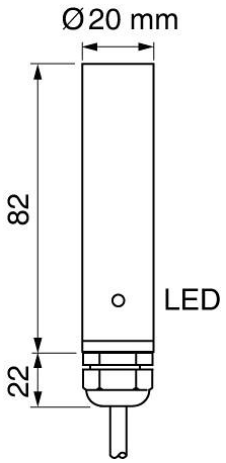

Pin Map

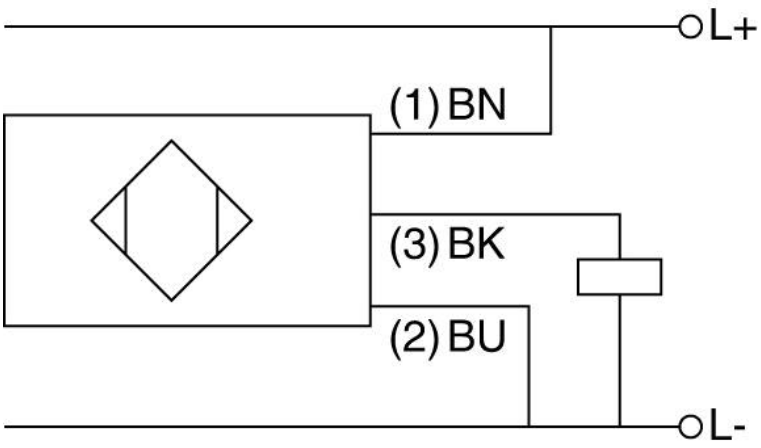

EGE-ELEKTRONIK SPEZIAL-SENSOREN GMBH

TEL. +49 4346 41580 . ege-elektronik.com