Capacitive level switches for hazardous areas - high temperature | KGFTa 150 Ex

- Level monitor for use up to 180 ° C
- Mounting in zone 0 (gas)
- Mounting in partition wall zone 0 / zone 1 (gas)
- Compact design

Process connection G1/2



TYPE	KGFTa 150 Ex
Product ID	P21244
Switching Point	-8 mm
Ex area uf use	Zone 0, Zone 0, partition wall Zone 0 / Zone 1
ATEX Certificate	EPS 19 ATEX 1 263 X
IECEx Certificate	IECEx EPS 19.0116X
ATEX marking gas	Ex II 1/2 G Ex ia/ib IIC T6...T3 Ga/Gb / Ex II 1G Ex ia IIC T6...T3 Ga
IECEx marking gas	Ex ia/ib IIC T6...T3 Ga/Gb / Ex ia IIC T6...T3 Ga
Ambient temperature gas zone 0 T6	-20 °C ... 80 °C
Ambient temperature gas zone 0 T5	-20 °C ... 95 °C
Ambient temperature gas zone 0 T4	-20 °C ... 130 °C
Ambient temperature gas zone 0 T3	-20 °C ... 180 °C
Material sensor touched by medium	stainless steel AISI 316 Ti, PEEK
Seal material	PTFE / FKM
Protection [EN 60529]	Sensor: IP 68 (3 bar) / LEMO-Anschluss: IP 54
Electrical connection	2 m PTFE cable plug system LEMO (series B)
Accessories	ex pre-amplifier KKa 030 Ex / ex amplifier IKMb 123 Ex-...

EGE-ELEKTRONIK SPEZIAL-SENSOREN GMBH

TEL. +49 4346 41580 . ege-elektronik.com

Technical Image

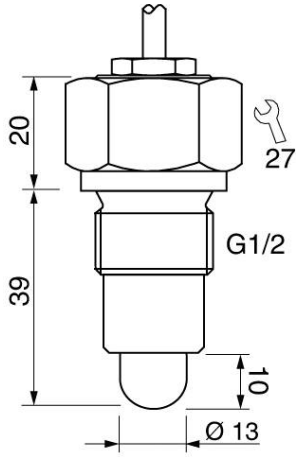

Pin Map

