# Capacitive level switches for hazardous areas - high temperature | KGFTa 125 Ex

- Level monitor for use up to 180 ° C
- Mounting in zone 0 (gas)
- Mounting in partition wall zone 0 / zone 1 (gas)
- Compact design

**Process connection G1/4**



| | |
|---|---|
| **TYPE** | KGFTa 125 Ex |
| **Product ID** | P21243 |
| **Switching Point** | -8 mm |
| **Process connection** | G1/4 |
| **Ex area uf use** | Zone 0, Zone 0, partition wall Zone 0 / Zone 1 |
| **ATEX Certificate** | EPS 19 ATEX 1 263 X |
| **IECEx Certificate** | IECEx EPS 19.0116X |
| **ATEX marking gas** | Ex II 1/2 G Ex ia/ib IIC T6...T3 Ga/Gb / Ex II 1G Ex ia IIC T6...T3 Ga |
| **IECEx marking gas** | Ex ia/ib IIC T6...T3 Ga/Gb / Ex ia IIC T6...T3 Ga |
| **Ambient temperature gas zone 0 T6** | -20 °C ... 80 °C |
| **Ambient temperature gas zone 0 T5** | -20 °C ... 95 °C |
| **Ambient temperature gas zone 0 T4** | -20 °C ... 130 °C |
| **Ambient temperature gas zone 0 T3** | -20 °C ... 180 °C |
| **Material sensor touched by medium** | stainless steel AISI 316 Ti, PEEK |
| **Seal material** | PTFE / FKM |
| **Protection [EN 60529]** | Sensor: IP 68 (3 bar) / LEMO-Anschluss: IP 54 |
| **Electrical connection** | 2 m PTFE cable plug system LEMO (series B) |



EGE-ELEKTRONIK SPEZIAL-SENSOREN GMBH

TEL. +49 4346 41580 . ege-elektronik.com

**Accessories**

ex pre-amplifier KKa 030 Ex / ex amplifier IKMb 123 Ex-...

Technical Image

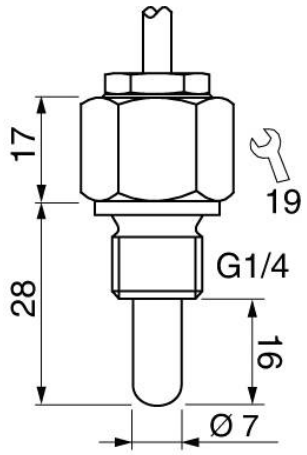


Pin Map

