Filling level analysis devices | KUA 120 GSOP

- For sensors up to +230 °C
- Auto adjustment to the medium at the push of a button
- Cable break monitoring
- Normally closed/ normally open
- 24 V DC



TYPE	KUA 120 GSOP
Product ID	P21190
Switching Point	auto adjust
Output	switching output
Output function	PNP-NO
Supply voltage	18 V DC ... 30 V DC
Current consumption max.	100 mA
Switching frequency	10 Hz
Hysteresis max.	10 %
Ambient temperature	0 °C ... 60 °C
EMC-class	A
Material housing	aluminium
Display	digital display
Cable brake monitoring	yes
Protection [EN 60529] housing	IP 65
Protection [EN 60529] LEM connection	IP 54
Electrical connection	M12 connector
Accessories	Anschlusskabel SLG 5..., SLW 5...

EGE-ELEKTRONIK SPEZIAL-SENSOREN GMBH
TEL. +49 4346 41580 . ege-elektronik.com

Technical Image

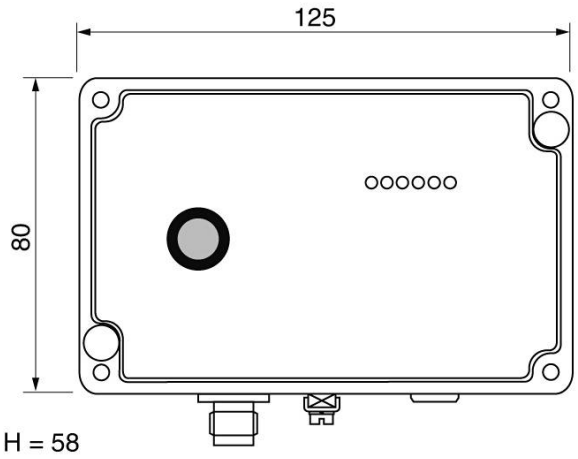

Pin Map

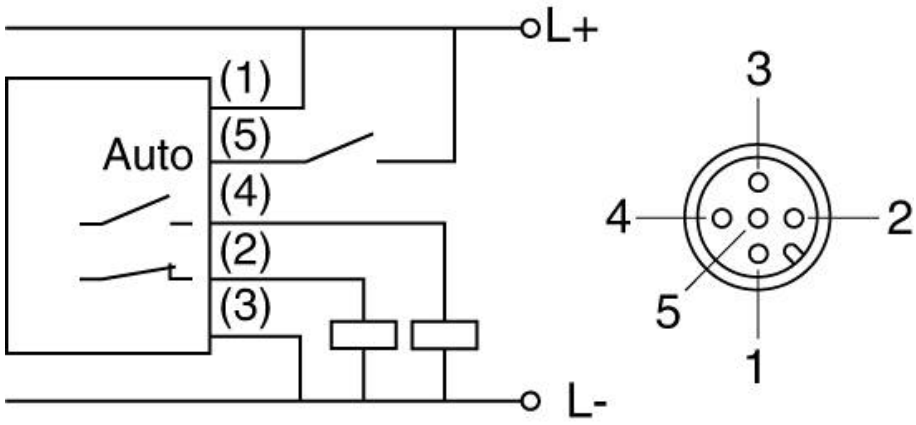

EGE-ELEKTRONIK SPEZIAL-SENSOREN GMBH
TEL. +49 4346 41580 . ege-elektronik.com