Sensors with the guided microwave measuring principle for precise filling level measurement | MFP 075 GA-LMF080

- Precise measurement with TDR technology
- Programmable with digital display
- Mono rod probe with PFA coating for aggressive media
- Analogue or with switching points series MFP...LMF
- For aggressive media with PFA-coated probe
- Independent of conductivity, viscosity and media consistency
- Reliable and wear-free: no moving parts
- For the filling level measurement of aggressive media

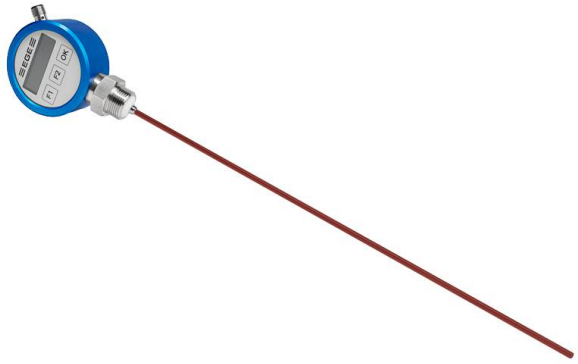

G3/4 - sensor length 800 mm - Output 4...20 mA

TYPE	MFP 075 GA-LMF080
Product ID	P21231
Design	single probe
Sensor length L	800 mm
Output	analog output 4...20 mA
Output function	linear
Supply voltage	20 V DC ... 27 V DC
Current consumption max.	45 mA
Load RL	200 Ω ... 500 Ω
Reverse polarity protection	✓
measurement accuracy	5 mm
Transition zone*	top: 40 mm, bottom: 25 mm
Ambient temperature	0 °C ... 70 °C
Medium temperature	0 °C ... 80 °C
For Media with minimum DK εr	≥ 20
Compressive strength (at 25°C)	10 bar

EGE-ELEKTRONIK SPEZIAL-SENSOREN GMBH

TEL. +49 4346 41580 . ege-elektronik.com

Material sensor touched by medium	stainless steel AISI 316 Ti, PFA, PTFE
Material housing	aluminium
Seal material	NBR, other materials on request
Display	digital display
Protection [EN 60529]	IP67
Electrical connection	M12 connector
Accessories	connecting cable SLG 3... or SLW 3..., connecting cable SLG 4... or SLW 4...
Note	* Transition zone: Depending on the installation conditions and the medium, deviations from the specified measuring accuracy can occur in this area.
Technical Image	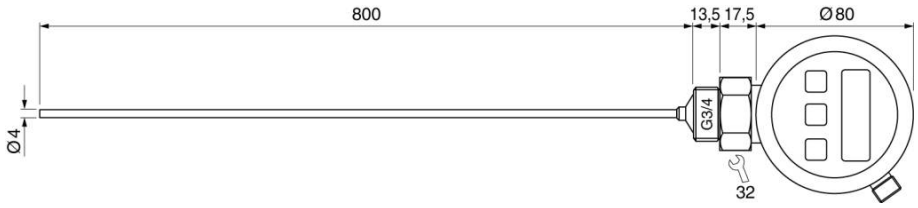
Pin Map	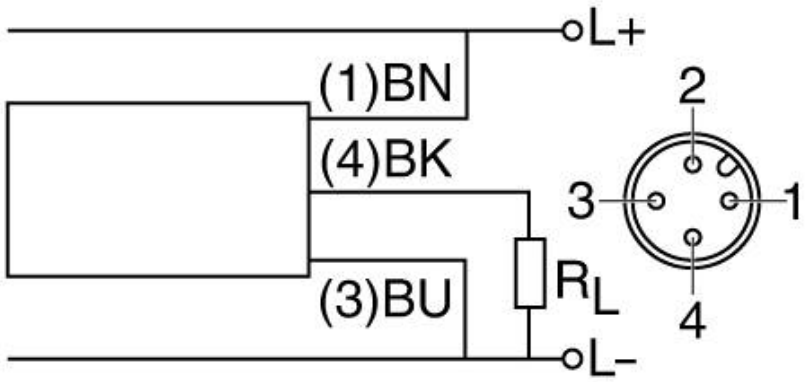

EGE-ELEKTRONIK SPEZIAL-SENSOREN GMBH

TEL. +49 4346 41580 . ege-elektronik.com