# Optical filling level monitor for explosive areas | UF2GKa 075 Ex-L1000

- Optical filling level monitor for liquid media in hazardous areas
- Resistant in kerosene / motor fuels
- Installation in zone 0 (gas)
- 3-wire sensor, intrinsically safe
- Needs ATEX certified amplifier



## G3/4 - sensor length 1000 mm - 2 m PVC-cable

| | |
|---|---|
| **TYPE** | UF2GKa 075 Ex-L1000 |
| **Product ID** | P21260 |
| **Switching Point** | -10 mm |
| **Medium** | liquid media |
| **Process connection** | G3/4 |
| **Sensor length L** | 1000 mm |
| **Ex area uf use** | Zone 0 |
| **ATEX Certificate** | EPS 18 ATEX 1 097 X |
| **IECEx Certificate** | IECEx EPS 18.0054X |
| **UKEX Certificate** | EPS 23 UKEX 1 052 X |
| **ATEX marking gas** | Ex II 1G Ex ia IIC T6...T3 Ga |
| **IECEx marking gas** | Ex ia IIC T6...T3 Ga |
| **Ambient temperature gas zone 0 T6** | -25 °C ... 75 °C |
| **Ambient temperature gas zone 0 T5** | -25 °C ... 75 °C |
| **Ambient temperature gas zone 0 T4** | -25 °C ... 75 °C |
| **Ambient temperature gas zone 0 T3** | -25 °C ... 75 °C |
| **Maximum values** | Ui = 9.6 V / Ii = 50.5 mA / Pi = 121.3 mW / Ci = 3.54 nF / Li = 1.3 µH |
| **Compressive strength (at 25°C)** | 16 bar |
| **Material sensor touched by medium** | stainless steel AISI 316 Ti, glass |



EGE-ELEKTRONIK SPEZIAL-SENSOREN GMBH
TEL. +49 4346 41580 . ege-elektronik.com

| | |
|---|---|
| **Material housing** | stainless steel AISI 316 Ti |
| **Seal material** | FFKM (Kalrez) |
| **Sensitivity** | constant for all detectable media |
| **Protection [EN 60529]** | IP 67 |
| **Electrical connection** | 2 m PVC-cable 3x0.5 mm² |
| **Associated amplifiers** | IKMb 123 Ex... |
| **Note** | Sensors with flange connection, tube fitting or different length are available on request. |

Technical Image

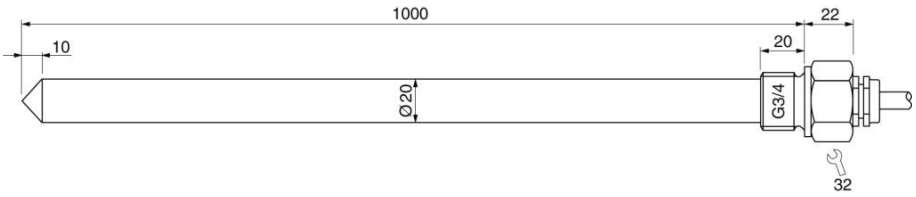


Pin Map

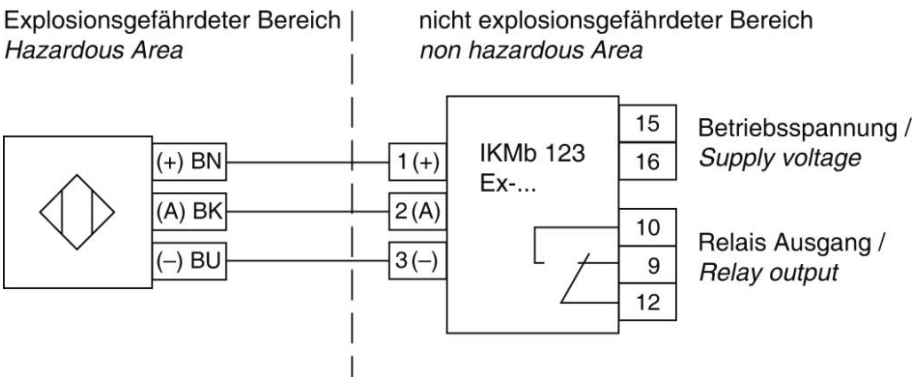




EGE-ELEKTRONIK SPEZIAL-SENSOREN GMBH
TEL. +49 4346 41580 . ege-elektronik.com