Optical filling level monitor for explosive areas | UF2GKa 075 Ex-L200

- Optical filling level monitor for liquid media in hazardous areas
- Resistant in kerosene / motor fuels
- Installation in zone 0 (gas)
- 3-wire sensor, intrinsically safe
- Needs ATEX certified amplifier



G3/4 - sensor length 200 mm - 2 m PVC-cable

TYPE	UF2GKa 075 Ex-L200
Product ID	P21258
Switching Point	-10 mm
Medium	liquid media
Process connection	G3/4
Sensor length L	200 mm
Ex area uf use	Zone 0
ATEX Certificate	EPS 18 ATEX 1 097 X
IECEx Certificate	IECEx EPS 18.0054X
UKEX Certificate	EPS 23 UKEX 1 052 X
ATEX marking gas	Ex II 1G Ex ia IIC T6...T3 Ga
IECEx marking gas	Ex ia IIC T6...T3 Ga
Ambient temperature gas zone 0 T6	-25 °C ... 75 °C
Ambient temperature gas zone 0 T5	-25 °C ... 75 °C
Ambient temperature gas zone 0 T4	-25 °C ... 75 °C
Ambient temperature gas zone 0 T3	-25 °C ... 75 °C
Maximum values	Ui = 9.6 V / Ii = 50.5 mA / Pi = 121.3 mW / Ci = 3.54 nF / Li = 1.3 µH
Compressive strength (at 25°C)	16 bar
Material sensor touched by medium	stainless steel AISI 316 Ti, glass

EGE-ELEKTRONIK SPEZIAL-SENSOREN GMBH
TEL. +49 4346 41580 . ege-elektronik.com

Material housing	stainless steel AISI 316 Ti
Seal material	FFKM (Kalrez)
Sensitivity	constant for all detectable media
Protection [EN 60529]	IP 67
Electrical connection	2 m PVC-cable 3x0.5 mm²
Associated amplifiers	IKMb 123 Ex...
Note	Sensors with flange connection, tube fitting or different length are available on request.

Technical Image

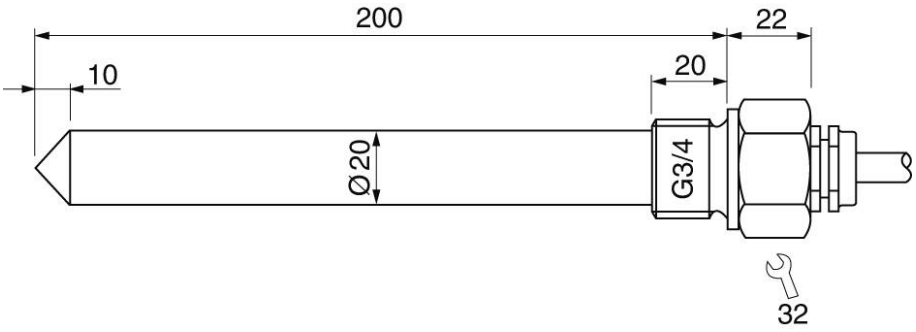

Pin Map

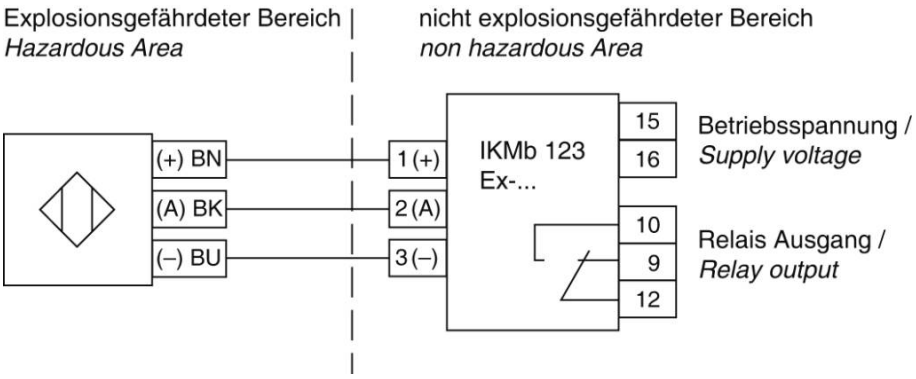

EGE-ELEKTRONIK SPEZIAL-SENSOREN GMBH
TEL. +49 4346 41580 . ege-elektronik.com