Sensors with the guided microwave measuring principle for precise filling level measurement | MFP 075 GPP-LP080

- Precise measurement of the filling level with TDR technology
- Programmable with digital display
- Parallel rod probe
- Analogue or with switching points
- Parallel rod: Reliable measurement of media with low DK value and in plastic tanks
- Independent of conductivity, viscosity and media consistency
- Reliable and wear-free: no moving parts
- For oil and media with low DK value



TYPE	MFP 075 GPP-LP080
Product ID	P21223
Design	parallel probe
Sensor length L	800 mm
Output	switching output
Output function	PNP-NO / NC
Supply voltage	20 V DC ... 27 V DC
Current consumption max.	45 mA
Reverse polarity protection	✓
measurement accuracy	5 mm
Transition zone*	top: 25 mm, bottom: 25 mm
Ambient temperature	0 °C ... 70 °C
Medium temperature	0 °C ... 80 °C
For Media with minimum DK εr	≥ 2,3
Compressive strength (at 25°C)	10 bar
Material sensor touched by medium	stainless steel AISI 316 Ti, POM, PTFE
Material housing	aluminium

EGE-ELEKTRONIK SPEZIAL-SENSOREN GMBH
TEL. +49 4346 41580 . ege-elektronik.com

Seal material	NBR, AFM 34, other materials on request
Display	digital display
Protection [EN 60529]	IP67
Electrical connection	M12 connector
Accessories	connecting cable SLG 3... or SLW 3..., connecting cable SLG 4... or SLW 4...
Note	* Transition zone: Depending on the installation conditions and the medium, deviations from the specified measuring accuracy can occur in this area.

Technical Image

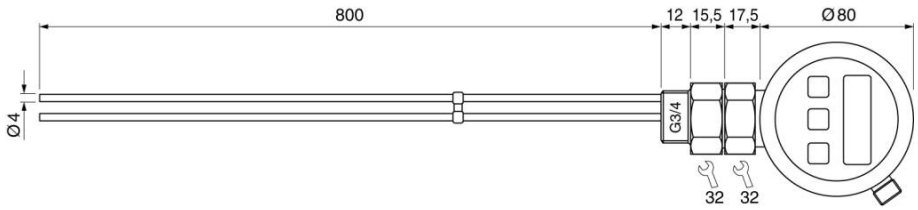

Pin Map

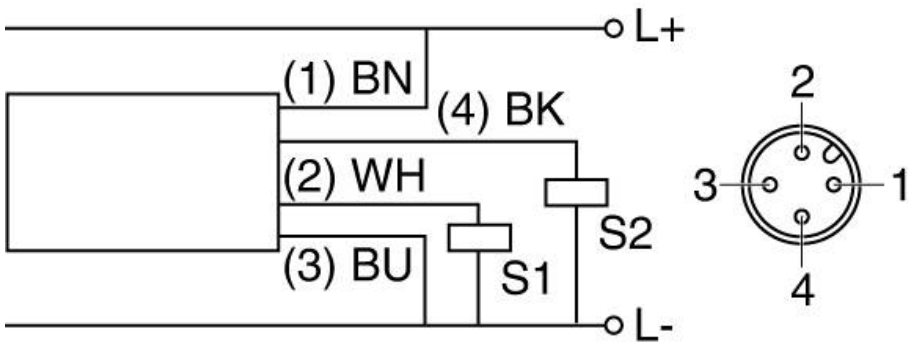

EGE-ELEKTRONIK SPEZIAL-SENSOREN GMBH
TEL. +49 4346 41580 . ege-elektronik.com