Optical filling level monitor for explosive areas | UFGSa 075 Ex-L200

This device has been discontinued! Replacement device: UF2GSa 075 Ex-L200



- Optical filling level monitor for use in Ex-zone 0 with resistant glass tip
- Ex Filling level monitor / filling level switch for the reliable monitoring of the maximum or minimum filling level of fluids
- Resistant materials: stainless steel and glass
- Detects fluids with a very low dielectric constant (DK value) such as oil

G3/4 - sensor length 200 mm

TYPE	UFGSa 075 Ex-L200
Product ID	P21240
Switching Point	-10 mm
Sensor length L	200 mm
Output	output with separate amplifier
Ex area uf use	Zone 0
ATEX Certificate	EPS 18 ATEX 1 097 X
IECEx Certificate	IECEx EPS 18.0054X
ATEX marking gas	Ex II 1G Ex ia IIC T6 Ga
IECEx marking gas	Ex ia IIC T6 Ga
Ambient temperature gas zone 0 T6	-20 °C ... 60 °C
Ambient temperature gas zone 0 T5	-20 °C ... 60 °C
Ambient temperature gas zone 0 T4	-20 °C ... 60 °C
Ambient temperature gas zone 0 T3	-20 °C ... 60 °C
Ambient temperature gas zone 1 T6	-25 °C ... 70 °C

EGE-ELEKTRONIK SPEZIAL-SENSOREN GMBH
TEL. +49 4346 41580 . ege-elektronik.com

Ambient temperature gas zone 1 T5	-25 °C ... 75 °C
Ambient temperature gas zone 1 T4	-25 °C ... 75 °C
Ambient temperature gas zone 1 T3	-25 °C ... 75 °C
Compressive strength (at 25°C)	16 bar
Material sensor touched by medium	stainless steel AISI 316 Ti, glass
Material housing	stainless steel AISI 316 Ti
Seal material	FFKM (Kalrez)
Drehmoment	100 Nm
Protection [EN 60529]	IP67
Electrical connection	M12 connector
Accessories	plug M12, SBG-DC (Z01060) or SBW-DC (Z00038)
Associated amplifiers	IKMb 123 Ex...

Technical Image

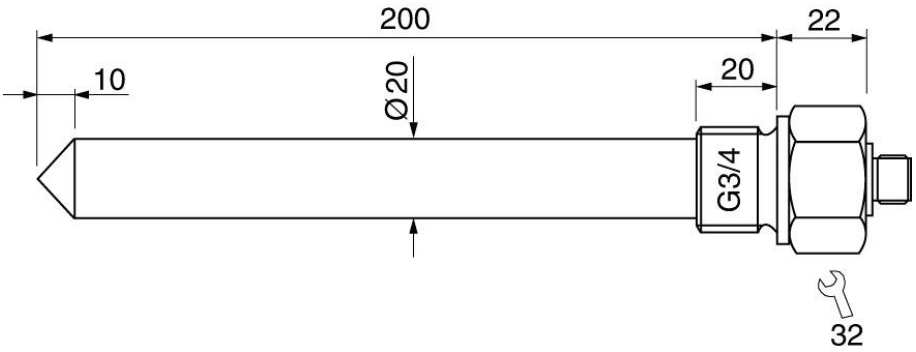

Pin Map

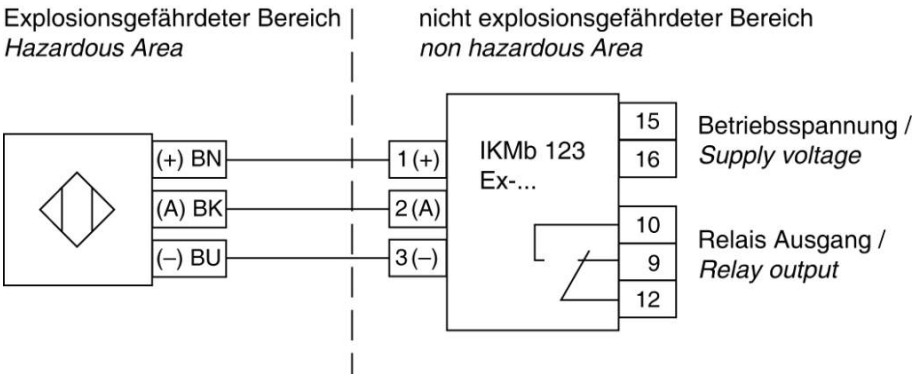

EGE-ELEKTRONIK SPEZIAL-SENSOREN GMBH
TEL. +49 4346 41580 . ege-elektronik.com