Filling level sensors with microwave measuring principle and switching point | MFC 075 GSP-L400

- Filling level monitor for the reliable monitoring of the maximum or minimum filling level of fluids and bulk materials
- Detects numerous media with low DK value
- Suitable for separation layer detection (e.g. water/oil)
- Insensitive to adhesions
- The level monitor works with a special variant of the frequency shift method



G3/4 - sensor length 400 mm - Output PNP NO

TYPE	MFC 075 GSP-L400
Product ID	P21188040
Switching Point	-6 mm
Sensor length L	400 mm
Output	switching output
Output function	PNP-NO
Supply voltage	16 V DC ... 30 V DC
Current consumption max.	50 mA
Short circuit proof	yes
Overcurrent release	250 mA
Reverse polarity protection	✓
Voltage drop max.	2 V
Switching frequency	5 Hz
Ambient temperature	-20 °C ... 85 °C
For Media with minimum DK εr	preselectable
Compressive strength (at 25°C)	16 bar
Material sensor touched by medium	PTFE
Material housing	stainless steel AISI 316 Ti
Seal material	NBR

EGE-ELEKTRONIK SPEZIAL-SENSOREN GMBH
TEL. +49 4346 41580 . ege-elektronik.com

Display	✓
Protection [EN 60529]	IP 67
Electrical connection	M12 connector
Accessories	connecting cable SLG 3... or SLW 3...

Technical Image

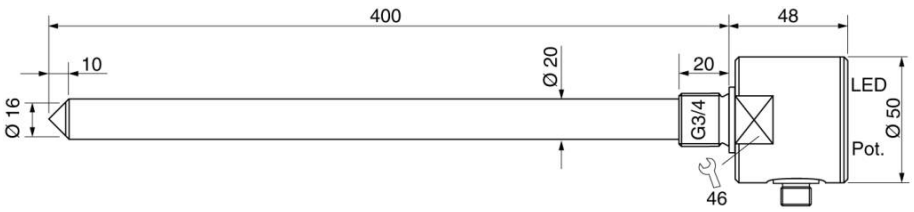

Pin Map

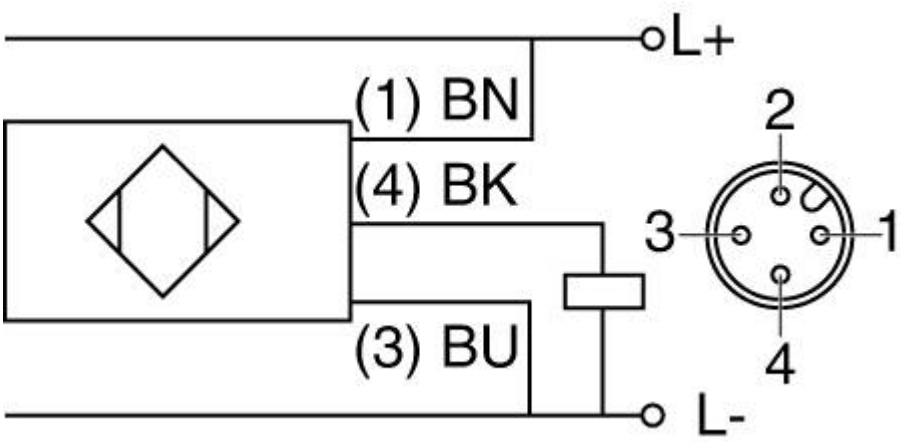

EGE-ELEKTRONIK SPEZIAL-SENSOREN GMBH
TEL. +49 4346 41580 . ege-elektronik.com