Filling level monitor with optical measuring principle | UFS 075 GSOP-L100

- Optical filling level monitor with resistant glass tip for the reliable monitoring of the maximum or minimum filling level of fluids
- Detects fluids with a very low DK values, such as oil Resistant to detergents, hydraulic and lubrication oil
- The medium changes the refractive index at the sensor tip and thus triggers a switching signal upon touching



G3/4 - sensor length 100 mm - Output PNP NC + NO

TYPE	UFS 075 GSOP-L100
Product ID	P21121
Switching Point	-10 mm
Sensor length L	100 mm
Output	switching output
Output function	PNP-NO
Supply voltage	10 V DC ... 33 V DC
Current consumption max.	10 mA
Short circuit proof	yes
Overcurrent release	250 mA
Reverse polarity protection	✓
Voltage drop max.	2 V
Switching frequency	5 Hz
Ambient temperature	-25 °C ... 70 °C
Compressive strength (at 25°C)	16 bar
EMC-class	A
Material sensor touched by medium	PES
Material housing	stainless steel AISI 316 Ti
Seal material	FPM
Protection [EN 60529]	IP 67

EGE-ELEKTRONIK SPEZIAL-SENSOREN GMBH
TEL. +49 4346 41580 . ege-elektronik.com

Electrical connection	M12 connector
Accessories	connecting cable SLW 4-2 LED (Z01157)

Technical Image

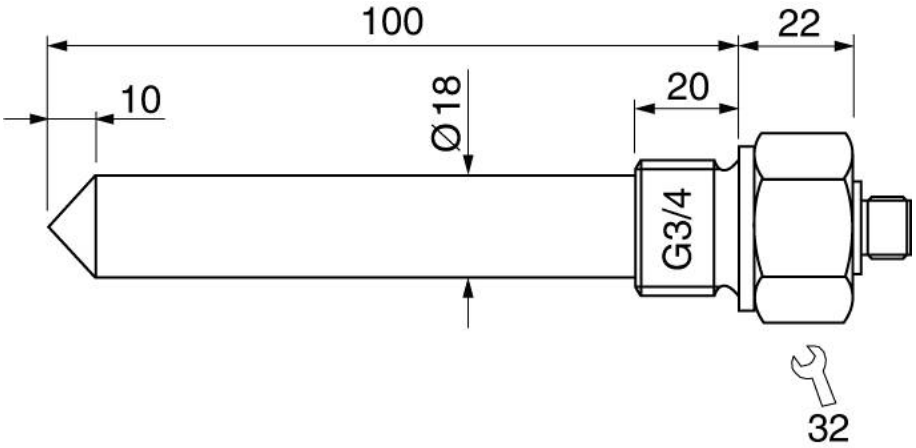

Pin Map

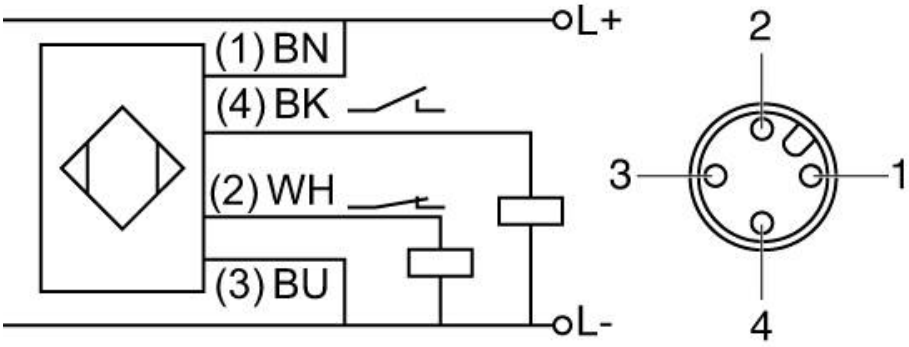

EGE-ELEKTRONIK SPEZIAL-SENSOREN GMBH
TEL. +49 4346 41580 . ege-elektronik.com