Capacitive sensors for high-temperature use | KFC 050 GSP-L400

Capacitive filling level monitor for top installation with stable stainless steel shaft and PTFE tip for adhesive media



- With chemical-resistant PTFE tip
- Robust stainless steel housing
- For use in medium temperatures up to 120° C
- For use in aggressive media

G1/2 - sensor length 400 mm - Output PNP NO

TYPE	KFC 050 GSP-L400
Product ID	P21164
Switching Point	-6 mm
Sensor length L	400 mm
Output	switching output
Output function	PNP-NO
Supply voltage	18 V DC ... 33 V DC
Current consumption max.	10 mA
Short circuit proof	yes
Overcurrent release	250 mA
Reverse polarity protection	✓
Voltage drop max.	2 V
Switching frequency	5 Hz
Ambient temperature	-25 °C ... 120 °C
Compressive strength (at 25°C)	16 bar
EMC-class	A
Material sensor touched by medium	PTFE
Material housing	stainless steel AISI 316 Ti
Seal material	FFKM (Kalrez)
Display	✓

EGE-ELEKTRONIK SPEZIAL-SENSOREN GMBH

TEL. +49 4346 41580 . ege-elektronik.com

Protection [EN 60529]	IP 67
Electrical connection	M12 connector
Accessories	connecting cable SLG 3... or SLW 3...

Technical Image

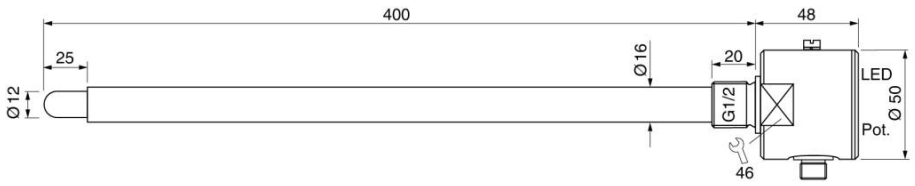

Pin Map

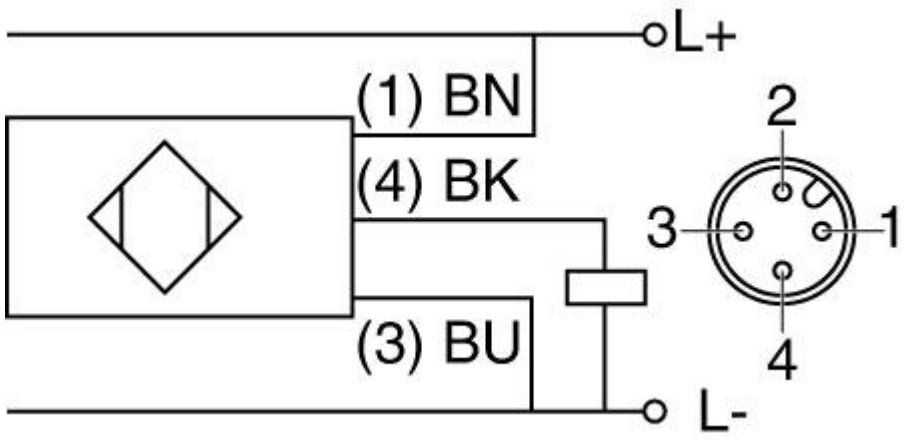

EGE-ELEKTRONIK SPEZIAL-SENSOREN GMBH
TEL. +49 4346 41580 . ege-elektronik.com