Capacitive sensors for high-temperature use | KFA 150-L135

Analogue capacitive filling level sensor for temperature from - 35° to 200° C, measuring probe from PEEK



- With analogue output for the continuous control of the level
- Use at medium temperatures of -35° C - + 200° C
- Probe from PEEK
- Continuously records the level of the medium
- For the continuous filling level recording of hot media, such as frying oil

G1/2 - sensing length 100 mm

TYPE	KFA 150-L135
Product ID	P21151
Measuring length	100 mm
Sensor length L	125 mm
Output	analog output with external amplifier
Reaction rate	2 Hz
Ambient temperature	-35 °C ... 200 °C
Compressive strength (at 25°C)	16 bar
EMC-class	A
Material sensor touched by medium	PEEK
Material housing	stainless steel AISI 316 Ti
Seal material	PTFE
Protection [EN 60529]	IP 68
Protection [EN 60529] LEM connection	IP 54
Electrical connection	2 m PTFE cable with LEM 01-plug system

EGE-ELEKTRONIK SPEZIAL-SENSOREN GMBH

TEL. +49 4346 41580 . ege-elektronik.com

Technical Image

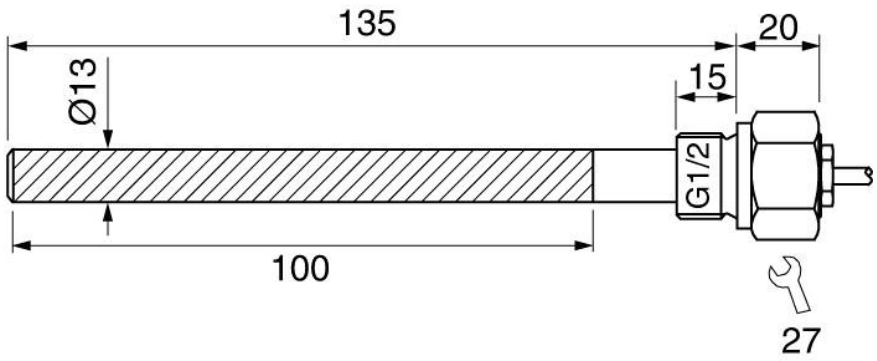

Pin Map

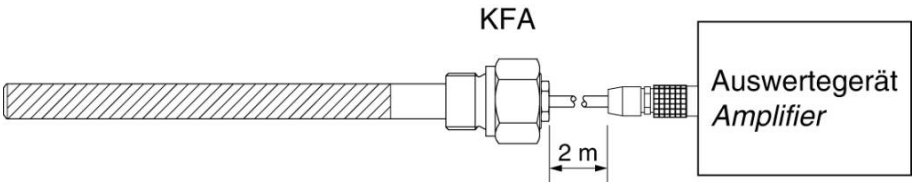

EGE-ELEKTRONIK SPEZIAL-SENSOREN GMBH
TEL. +49 4346 41580 . ege-elektronik.com