Capacitive sensors for aggressive, corrosive media | KGF 014 GSP

- Capacitive filling level monitor / filling level switch for the reliable monitoring of the maximum or minimum filling level of fluids or bulk materials
- With PTFE housing: For use in aggressive media
- Compact cylindrical design with thread (M14, M30, G3/4’) for ease of assembly
- Suitable for tight spaces



M14x1 - Output PNP NO

TYPE	KGF 014 GSP
Product ID	P20130
Switching Point	-2 mm
Output	switching output
Output function	PNP-NO
Supply voltage	10 V DC ... 33 V DC
Current consumption max.	4 mA
Short circuit proof	yes
Overcurrent release	800 mA
Reverse polarity protection	✓
Voltage drop max.	1 V
Switching frequency	10 Hz
Ambient temperature	-25 °C ... 75 °C
EMC-class	A
Material sensor touched by medium	PTFE
Material housing	PTFE
Display	✓
Protection [EN 60529]	IP 67
Electrical connection	2 m PVC-cable 3x0.34 mm²
Accessories	Befestigungsmuttern im Lieferumfang enthalten

EGE-ELEKTRONIK SPEZIAL-SENSOREN GMBH
TEL. +49 4346 41580 . ege-elektronik.com

Technical Image

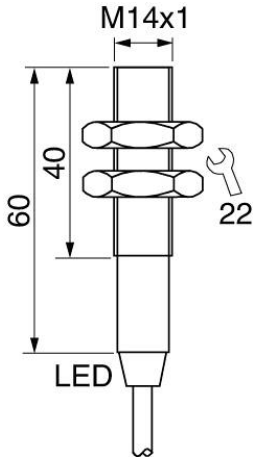

Pin Map

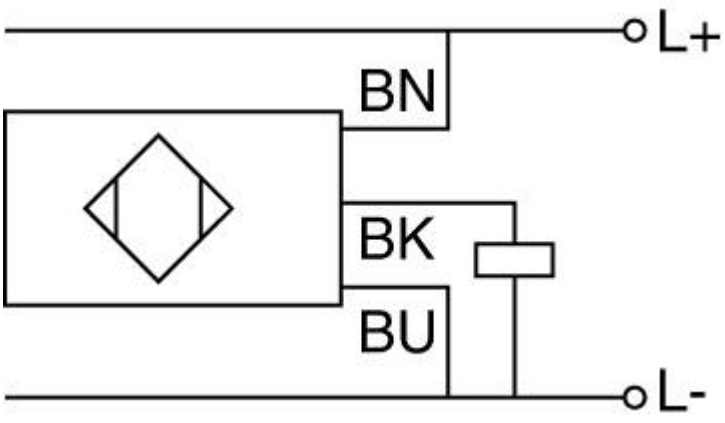

EGE-ELEKTRONIK SPEZIAL-SENSOREN GMBH
TEL. +49 4346 41580 . ege-elektronik.com