# Infrared detectors for detecting hot objects | ODML 900 WS

- Detection range object temperatures 350° C...800° C
- Compact device Optics
- With optic fibre cable for ambient temperatures up to 250° C
- For the detection of hot objects such as steel girders or flames
- For use in rough industrial environments



## Sensing temperature 800 °C - 2-wire AC NO

| | |
|---|---|
| **TYPE** | ODML 900 WS |
| **Product ID** | P60074 |
| **Response temperature** | 800 °C |
| **Output** | switching output |
| **Output function** | relay NO |
| **Supply voltage** | 20...250 V AC |
| **Current consumption max.** | 3 mA |
| **Switching current max.** | 400 mA |
| **Short circuit proof** | no |
| **Voltage drop max.** | 7 V |
| **Minimum load current** | 20 mA |
| **Hysteresis** | approx 5 % of the sensing temperature |
| **Ambient temperature** | -20 °C ... 75 °C |
| **EMC-class** | A |
| **Material housing** | stainless steel AISI 316 Ti |
| **Protection [EN 60529]** | IP 67 |
| **Electrical connection** | VEG 5-5, IP 68 |
| **Note Accessories** | Accessories: See “Accessories for infrared detectors” |



EGE-ELEKTRONIK SPEZIAL-SENSOREN GMBH
TEL. +49 4346 41580 . ege-elektronik.com

Technical Image

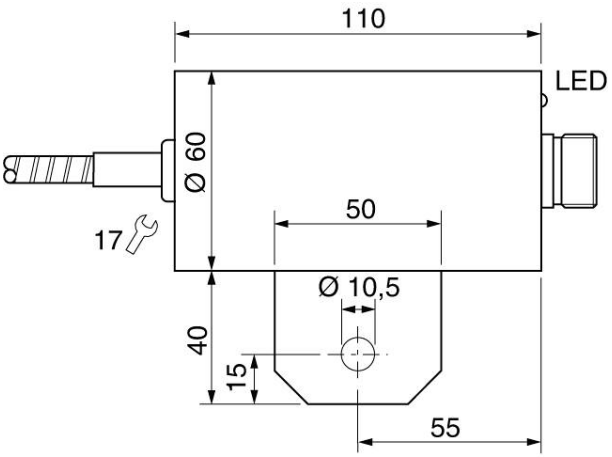


Pin Map

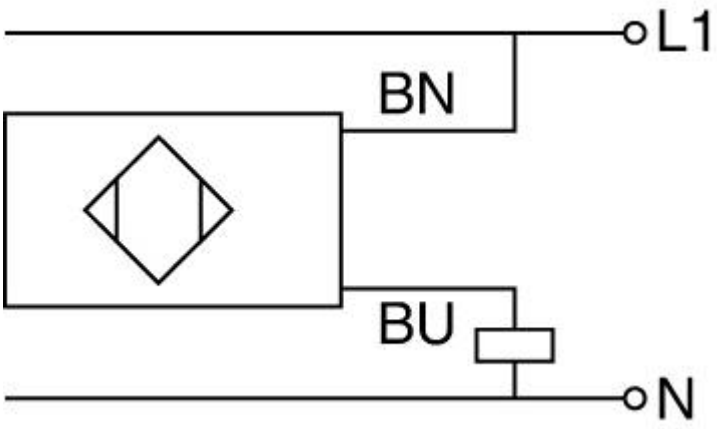




EGE-ELEKTRONIK SPEZIAL-SENSOREN GMBH
TEL. +49 4346 41580 . ege-elektronik.com