Amplifier MDV 3100. | MDV 3172 WR2

- MDV 3172 analysis device for detecting larger metal parts under rough conditions
- Analysis unit for metal detector system for the protection of cutters, grinders, rollers and crushers against metal parts in the conveyed material Protection against metal parts such as digger bucket teeth, tool components or panelling
- Automatic calibration



230 V AC - relay changeover

TYPE	MDV 3172 WR2
Product ID	P81010
Output	switching output
Output function	relay
Supply voltage	230 V AC +/- 10%
Current consumption max.	20 mA
Switching voltage max.	250 V AC / 220 V DC
Switching current max.	2 A DC, 1 A AC
Switching power max.	1000 VA / 60 W (cos φ = 1)
Ambient temperature	-25 °C ... 70 °C
EMC-class	A
Material housing	PVC
Display	LED
Protection [EN 60529]	IP 672
Electrical connection	2 m PVC-cable 7x0.5 mm²
Accessories	central screw M16x1 (Z00105) is part of delivery
Note	The amplifier MDV 3172 has a relay-change over-function. During metal detection, the relay is activated and contact 4-5 is closed (2-5 is open)., After switch-on, the contact 5-4 is closed for 2 seconds. This can be used for testing purposes.

EGE-ELEKTRONIK SPEZIAL-SENSOREN GMBH
TEL. +49 4346 41580 . ege-elektronik.com

Technical Image

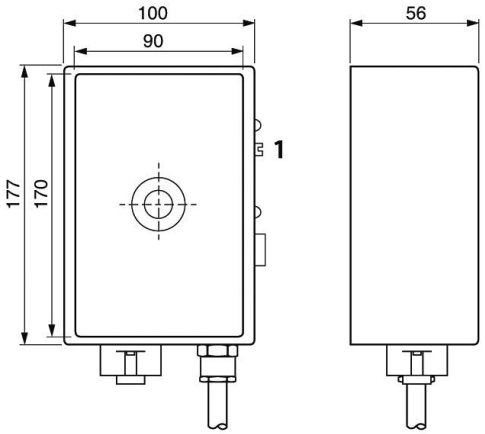

1 Potentionmeter

Diagram

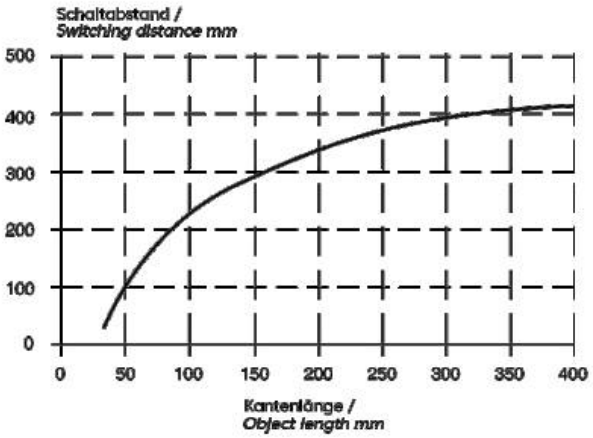

Maximale Empfindlichkeit mit Probekörper aus ST 37 /

Maximum sensitivity with ST 37 sample

EGE-ELEKTRONIK SPEZIAL-SENSOREN GMBH

TEL. +49 4346 41580 . ege-elektronik.com