Infrared detectors for analogue temperature measurement | OD 100 GA 150

- For the detection of objects with temperatures from 50 °C ... 150 °C
- Contactless temperature measurement
- Robust stainless steel housing
- For use in rough industrial environments
- Can be used as temperature sensor

M38x1.5 -sensing range 50...150 °C - Output 4...20 mA



TYPE	OD 100 GA 150
Product ID	P61001
Detection range °C	50 °C ... 150 °C
Field of view	< 10 °
Output	analog output 4...20 mA
Supply voltage	18...32 V DC
Current consumption max.	40 mA
Reproduction	± 1 °C
Temperature coefficient [%/K from measured value]	± 1 %/K
Response time	< 100 ms
Precision	± 3 %
Load resistance RL	500 Ω
Ambient temperature	-10 °C ... 60 °C
EMC-class	A
Material housing	stainless steel AISI 316 Ti
Protection [EN 60529]	IP 67
Electrical connection	M12 connector
Note Accessories	Accessories: See “Accessories for infrared detectors”

EGE-ELEKTRONIK SPEZIAL-SENSOREN GMBH

TEL. +49 4346 41580 . ege-elektronik.com

Technical Image

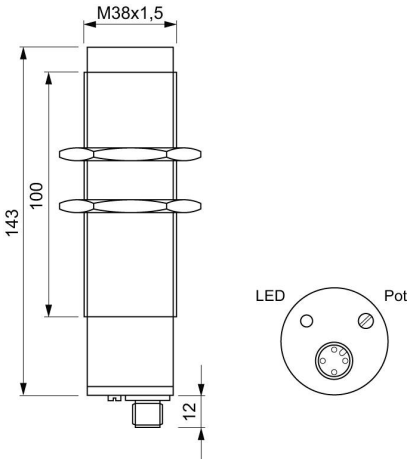

Pin Map

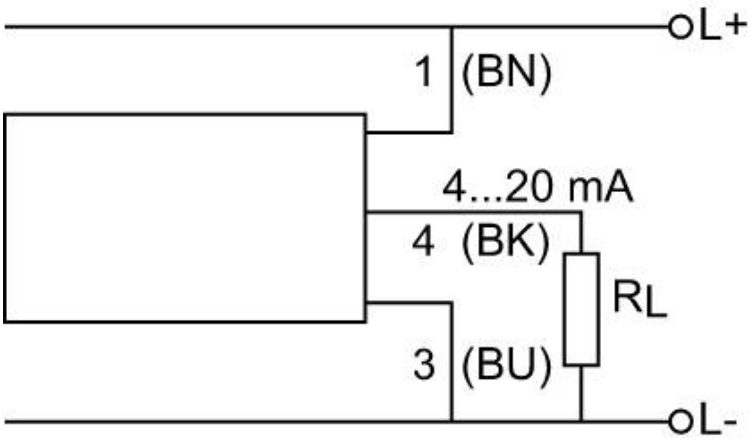

EGE-ELEKTRONIK SPEZIAL-SENSOREN GMBH

TEL. +49 4346 41580 . ege-elektronik.com